ROCK ANCHORS SHALL BE PLACED AT ALL TRANSVERSE SEAMS AND MAX 100' INTERVALS.

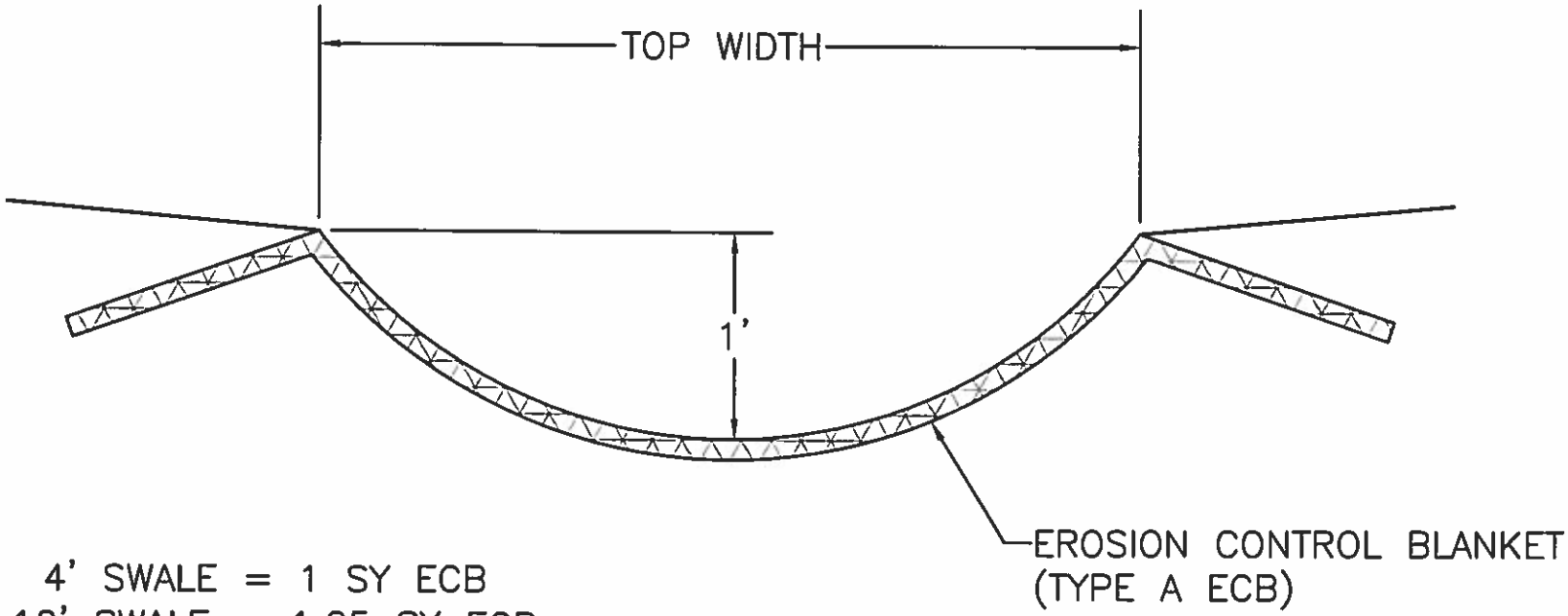

4' SWALE = 1 SY ECB
10' SWALE = 1.25 SY ECB
20' SWALE = 1.5 SY ECB

USE WITH AML 21-10-5, 21-70-1

ECB DITCH- SWALE (AML 21-10-3)

KY DAML 9-2013

NOTES:

1. SPACING OF ANCHORS SHALL BE AT ALL TRANSVERSE SEAMS AND 100' MAX INTERVALS.
2. TWO HAYBALES SHALL BE PLACED ON EACH SIDE AT ALL ANCHOR LOCATIONS
3. SOIL AMENDMENTS AND SEED SHALL BE APPLIED BEFORE INSTALLING EROSION CONTROL BLANKETS.

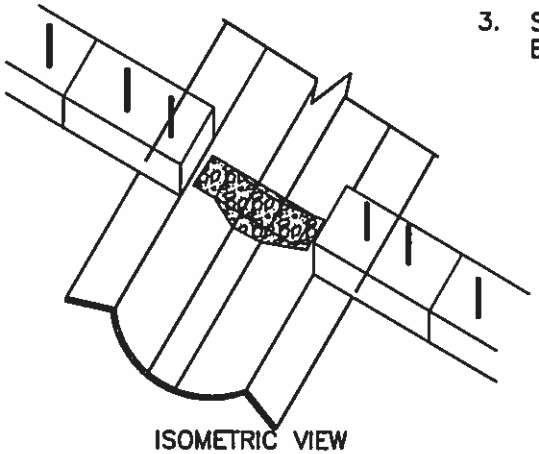

ISOMETRIC VIEW
NTS

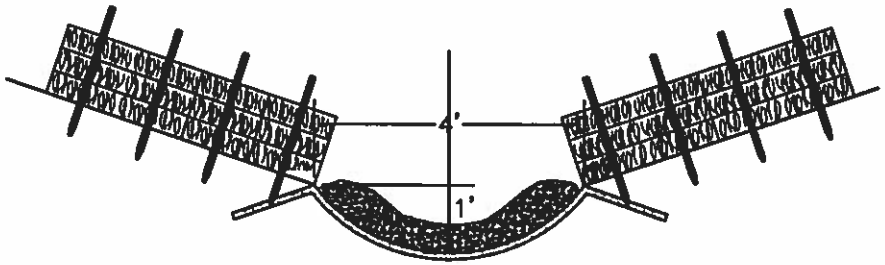

SECTION A–A
NTS

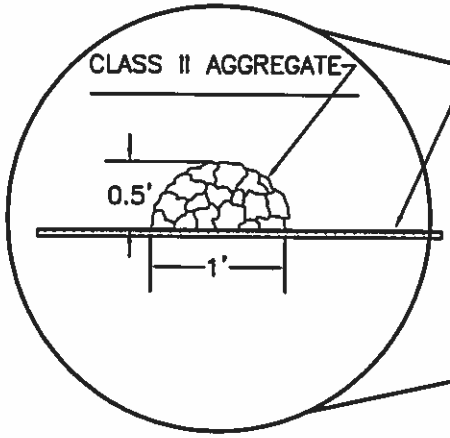

DETAIL A
NTS

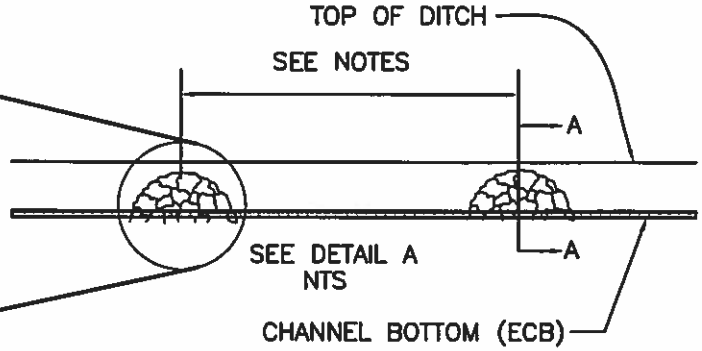

PROFILE VIEW
NTS

USE WITH AML 21–10–3

ECB ANCHOR- SWALE DITCH SEAMS (AML 21-70-1)

KY DAML 9–2013

NOTES:

1. SPACING OF ANCHORS SHALL BE AT ALL TRANSVERSE SEAMS AND 100' MAX INTERVALS UNLESS STATED OTHERWISE ON THE DESIGN PLANS OR SPECIAL CONDITIONS.

2. SOIL AMENDMENTS AND SEED SHALL BE APPLIED BEFORE INSTALLING EROSION CONTROL BLANKETS.

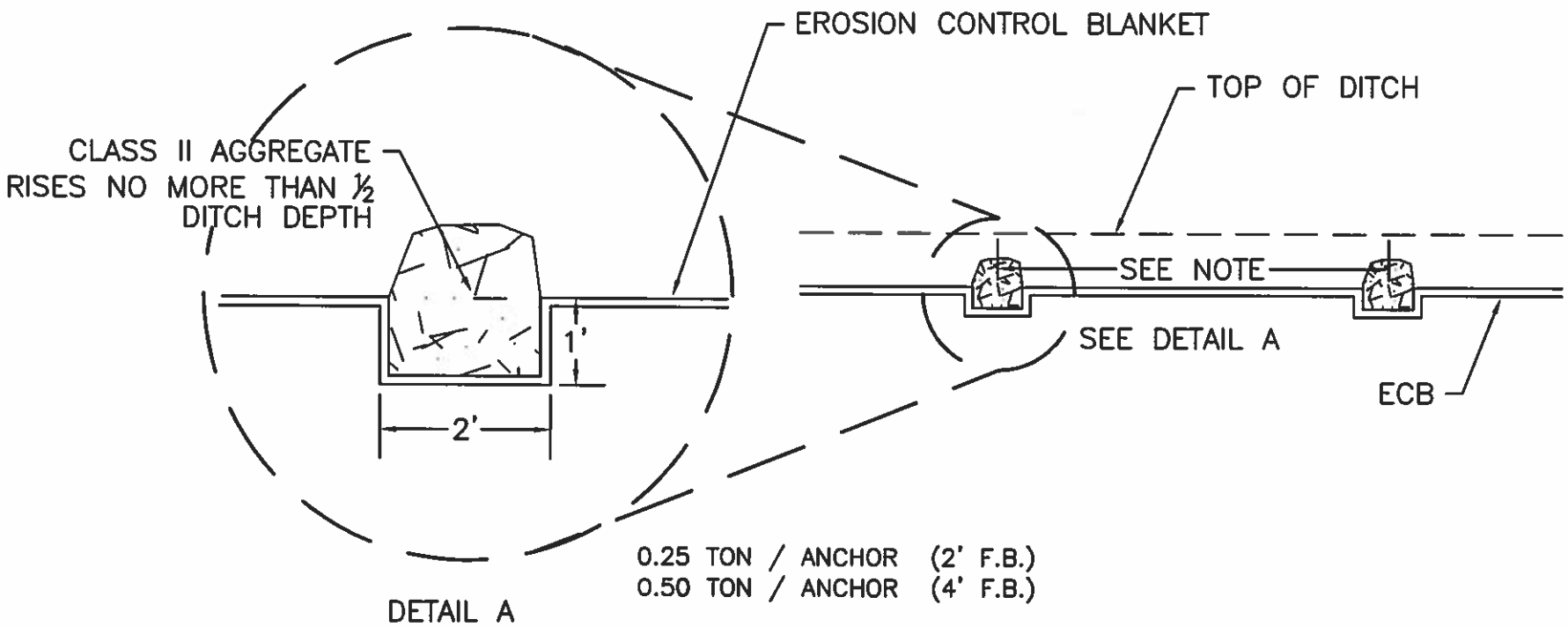

USE WITH AML 21-10-4

ECB ANCHOR- FB DITCH SEAMS (AML 21-70-2)

KY DAML 9-2013

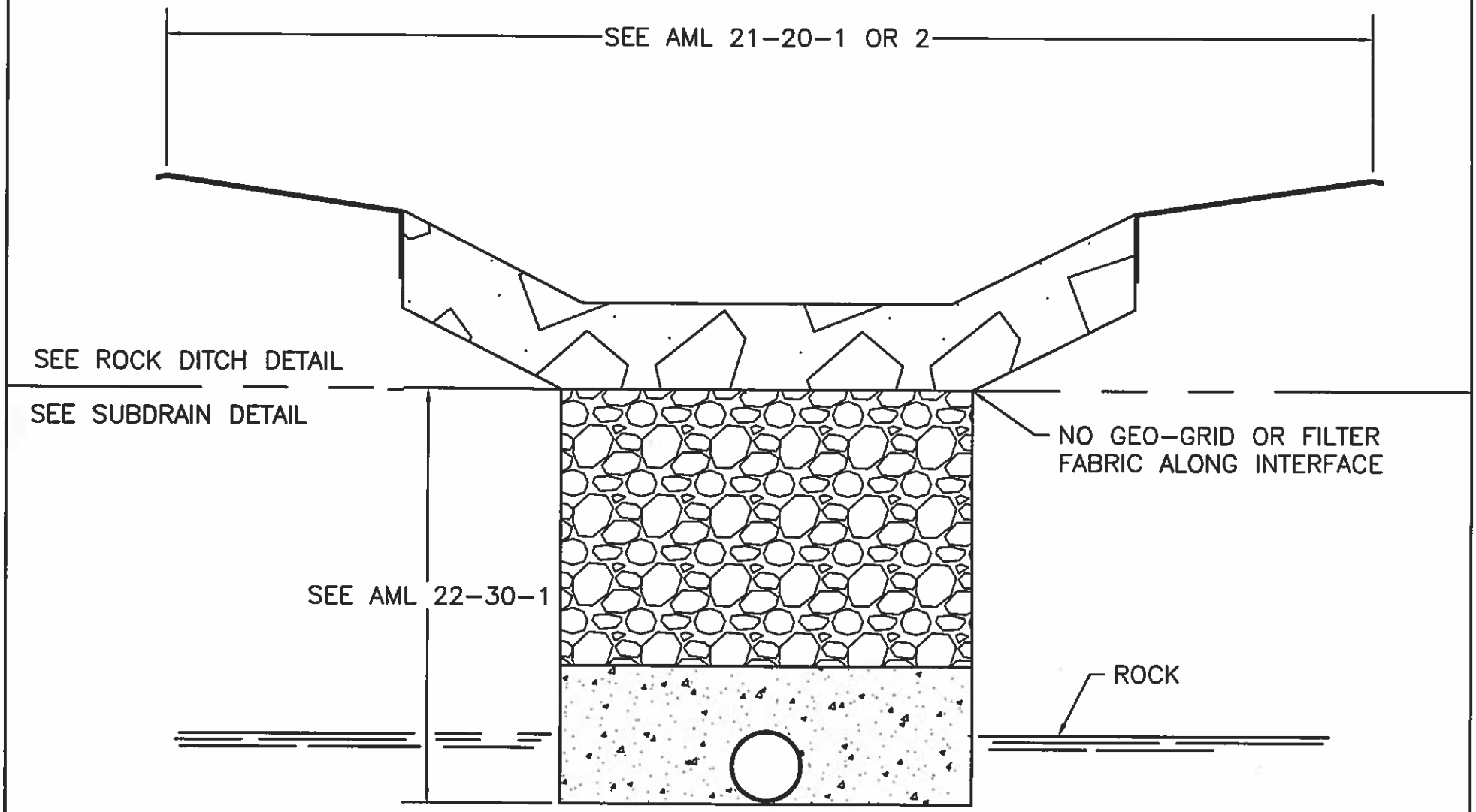

SEE THE DITCH OR SUBDRAIN DETAIL FOR SPECIFIC INFORMATION. SEPARATE BID ITEMS.

COMBINATION ROCK DITCH-DRAIN (AML 22-30-4)

KY DAML 9-2013

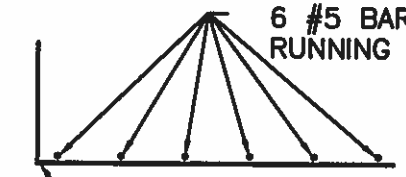

FOOTER REINFORCEMENT DETAIL
NTS

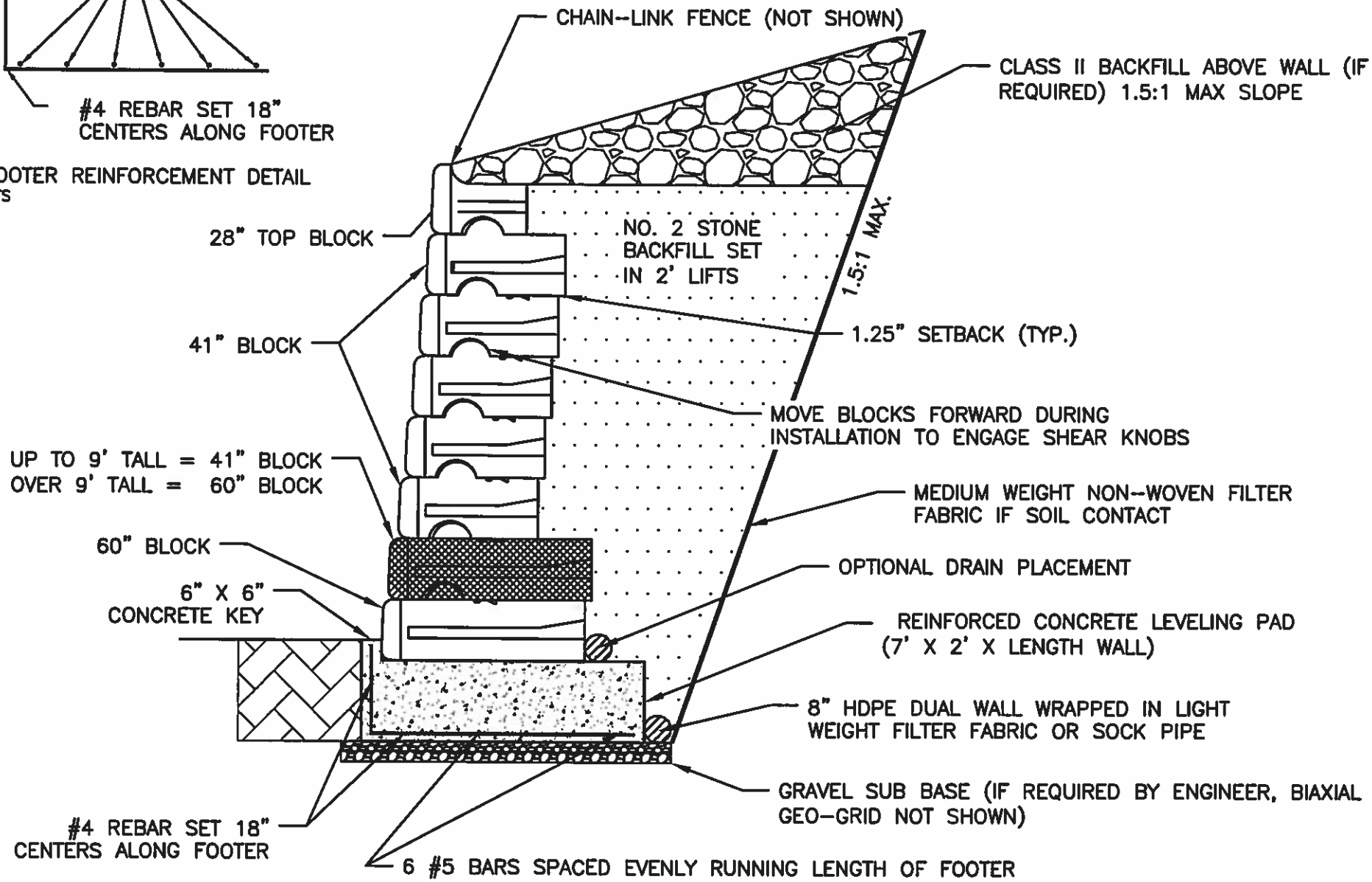

USE WITH AML 30-20-3

MSC NON-REINFORCED BLOCK WALL- TYPE II (AML 30-20-2)

KY DAML 9-2013

NOTES:

BASE OF FOOTER (OR WALL) MUST BE SET A MIN. OF 24" OR BELOW LOCAL FROSTLINE (WHICHEVER IS DEEPER).

WALLS GREATER THAN 12' REQUIRE SPECIAL DESIGN.

ALL REBAR SHALL HAVE 2" MIN. CLEARANCE.

Design Height	60" Each	41" Each	28" Each	Geo-Grid SY/LF	Base Ton/LF	FF SY/LF	No. 2 Ton/LF	Class II Ton/LF
4.5	1	1	1	0.8	0.2	0.8	1.2	0.8
6	1	2	1	0.8	0.2	1.0	1.7	0.9
7.5	1	3	1	0.8	0.2	1.2	2.2	0.9
9	1	4	1	0.8	0.2	1.3	2.7	1.0
10.5	2	4	1	0.8	0.2	1.4	3.3	1.1
12	2	5	1	0.8	0.2	1.7	3.2	1.1

Design Height	60" Per LF	41" Per LF	28" Per LF
4.5	0.26	0.26	0.26
6	0.26	0.52	0.26
7.5	0.26	0.78	0.26
9	0.26	1.04	0.26
10.5	0.52	1.04	0.26
12	0.52	1.30	0.26

Footer (per LF length)		
Concrete	# 4 Rebar	# 5 Rebar
CY/LF	Lbs/LF	Lbs/LF
0.53	3.79	9.012

EXAMPLE: 100' WALL LENGTH, 12' TALL

60" BLOCK REQUIRED= (0.52) X (100)= 52
41" BLOCK REQUIRED= (1.30) X (100)= 130
28" BLOCK REQUIRED= (0.26) X (100)= 26

USE WITH AML 30-20-2

MSC NON-REINFORCED BLOCK WALL- TYPE II NOTES (AML 30-20-3)

KY DAML 9-2013

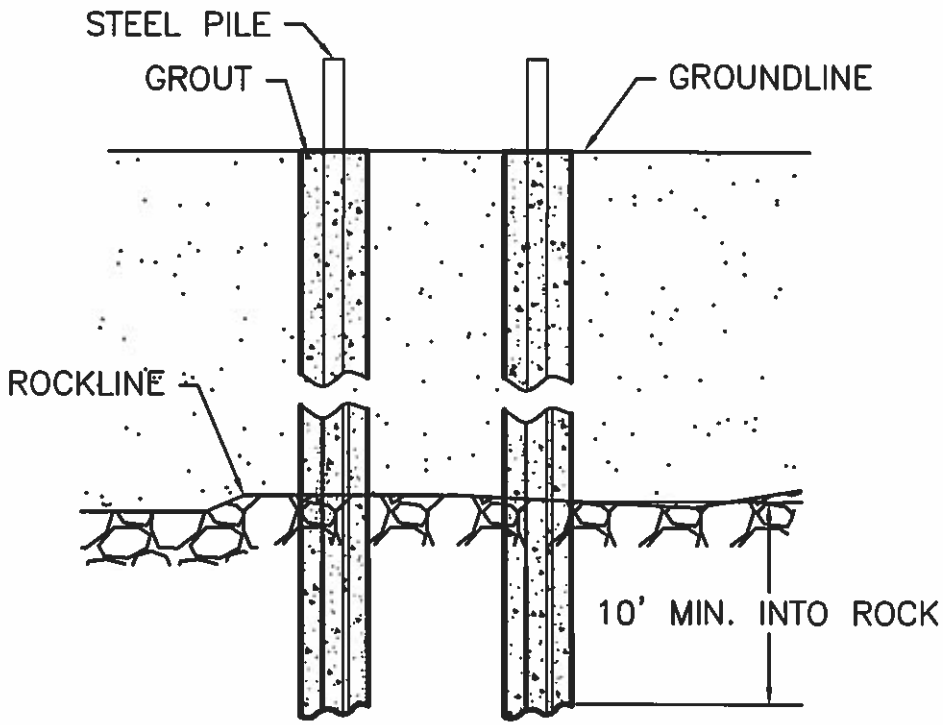

DESIGN CHART	
DEPTH OF ROCK	CTR-CTR SPACING OF RAILS AND NO. OF ROWS
5'-9'	USE 48" SPACING- 1 ROW
10'-14'	USE 36" SPACING- 1 ROW
15'-19'	USE 24"- 1 ROW OR USE 48"- 2 ROWS
20'-24'	USE 24"- 2 ROWS OR USE 36"- 3 ROWS
25'+	USE 24" SPACING- 3 ROWS

- IF SOIL DEPTH EXCEEDS 5 FEET, THEN A 2' THICK CONCRETE CAP SHOULD BE USED TO TIE THE STEEL PILES TOGETHER UNLESS DIRECTED OTHERWISE ON THE DRAWINGS OR BY THE ENGINEER IN WRITING.
- MINIMUM PILE SIZE IS W8 X 40
- ENGINEER MAY SUBSTITUE STEEL PILES FOR 130 LBS/YD RAIL STEEL (SEE NOTE 5).

NOTES:

1. IF DEPTHS TO ROCK EXCEED 20' THE ENGINEER MAY REQUIRE ADDITIONAL EXCAVATION.
2. BEAMS SHALL BE ORIENTED WITH FLANGES PERPENDICULAR TO POSSIBLE SLIDE MOVEMENT.
3. BEAMS SHALL BE ENCASED WITH GROUT FOR THE ENTIRE DEPTH OF THE HOLE.
4. BEAMS SHALL BE STRAIGHT AND STRUCTURALLY SOUND. ENGINEER MUST AUTHORIZE SPLICING. NO SPLICING SHALL BE ALLOWED IN RAILROAD RAILS.
5. THE ENGINEER MAY SPECIFY THE SIZE OR TYPE OF STEEL, INCLUDING USE OF RAILROAD STEEL RAILS, ON DRAWINGS, IN THE SPECIAL CONDITIONS, OR IN WRITING DURING CONSTRUCTION.

SEE AML 30–30–2 FOR CAP DETAILS

STEEL PILES FOUNDATION (AML 30-30-1)

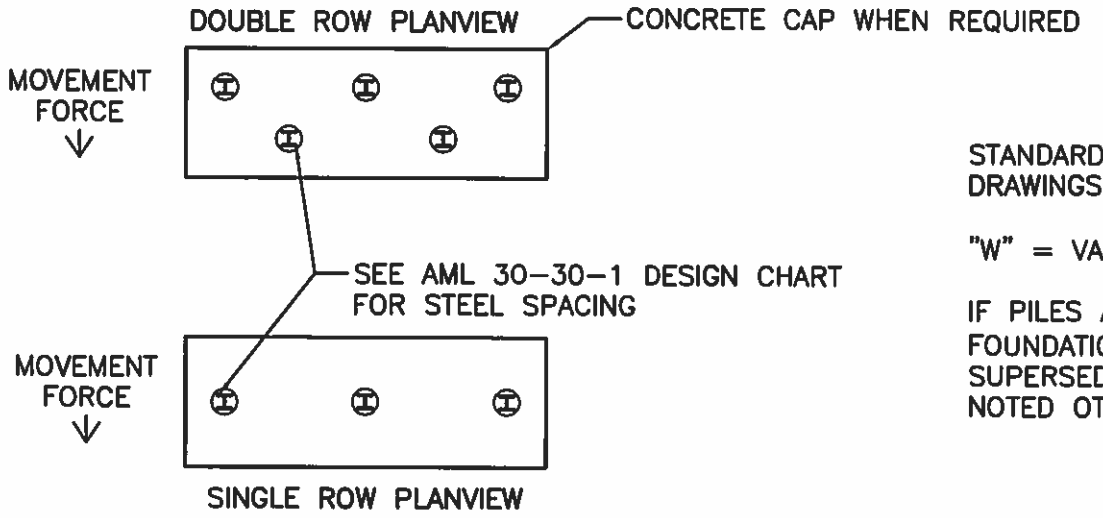

STANDARD "H"= 2 FEET UNLESS NOTED OTHERWISE ON DRAWINGS OR SPECIAL CONDITIONS.

"W" = VARIES BASED ON PILE SIZE + 12"

IF PILES ARE SET IN CONCRETE CAP USED AS A WALL FOUNDATION, THEN THIS DETAIL'S REINFORCEMENT PATTERN SUPERSEDES THE FOOTER DETAIL FOR THAT WALL UNLESS NOTED OTHERWISE ON THE DRAWINGS.

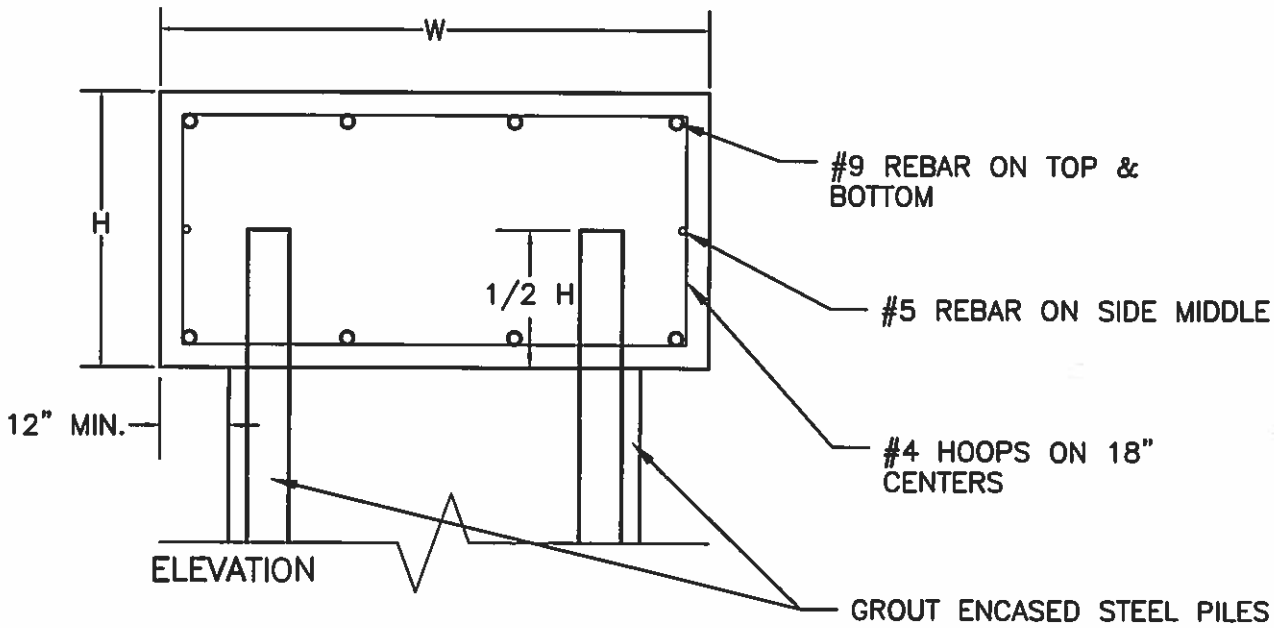

PILES SET IN CONCRETE CAP

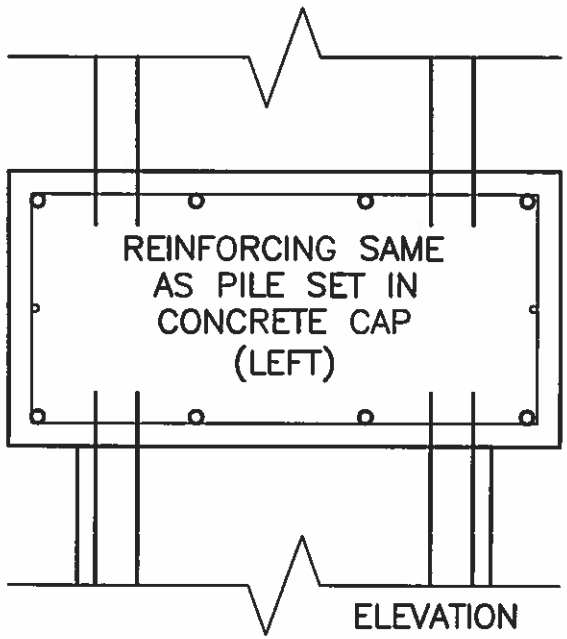

PILES EXTENDING THROUGH CONCRETE CAP

USE WITH AML 30-30-1

STEEL PILES REINFORCED CONCRETE CAP (AML 30-30-2)

KY DAML 9-2013

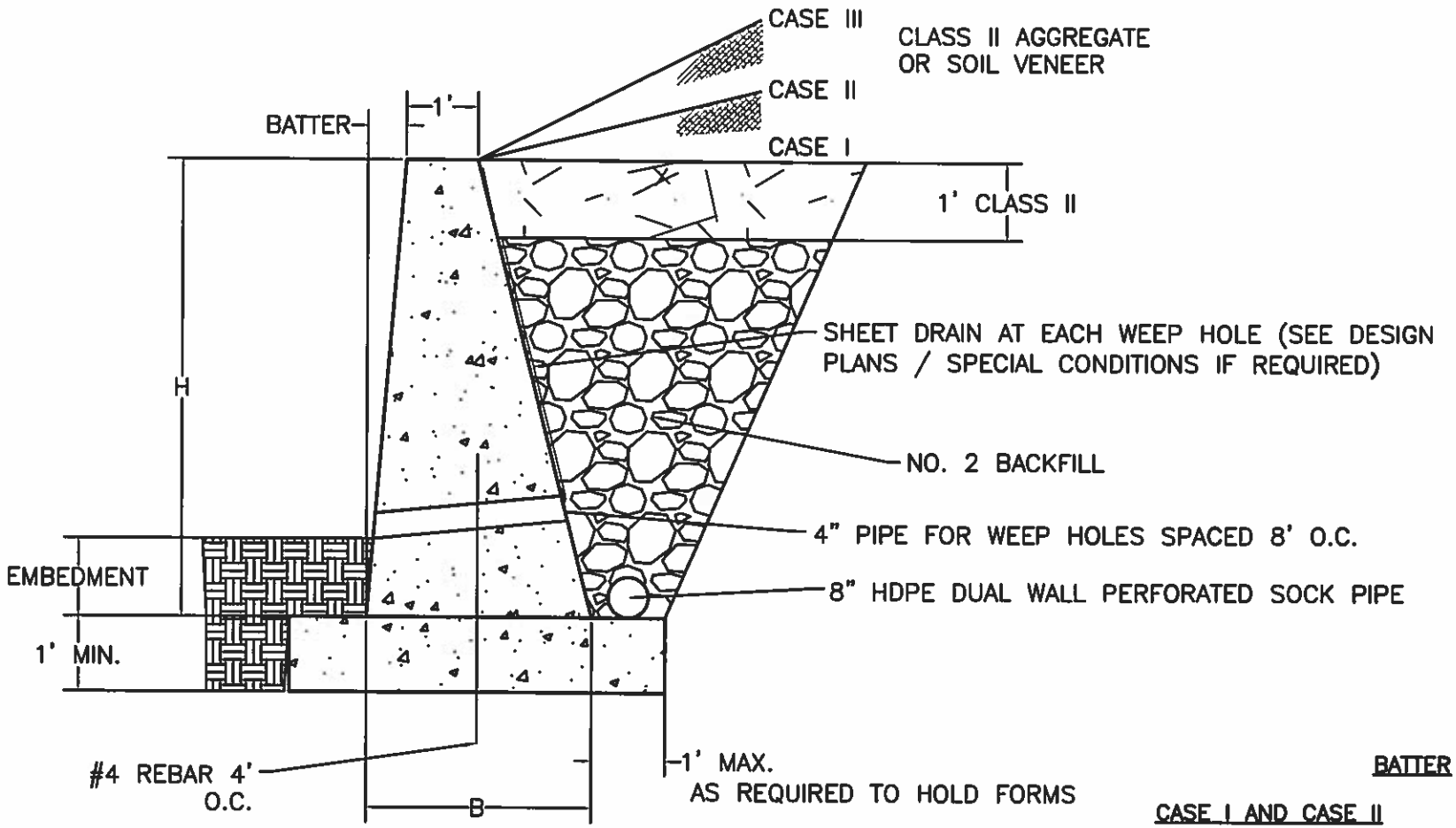

EMBEDMENT

1. MINIMUM EMBEDMENT VALUE FOR FIRM EARTH IS 2'–0".
2. CASE III REQUIRES AN EMBEDMENT OF 1/4 H FOR A WALL OVER 8'.
3. FOR FOOTER SET ON ROCK 1/2 FOOTER DEPTH WILL BE SET IN ROCK.

BATTER

CASE I AND CASE II
H = 3'–0" TO LESS THAN 5'–0" (VERTICAL)
H = 5'–0" TO LESS THAN 10'–0" (12:1)
H = 10'–0" TO LESS THAN 12'–0" (6:1)

CASE III
H = 3'–0" TO LESS THAN 5'–0" (12:1)
H = 5'–0" TO LESS THAN 12'–0" (6:1)

USE WITH AML 30–50–2

CONCRETE GRAVITY WALL (AML 30-50-1)

THE RETAINING WALL DEPICTED ON THIS DRAWING SHALL BE USED WHEN THE HEIGHT ("H" DIMENSION) OF THE WALL IS 12'-0" OR LESS PROVIDED THE FILL COMPLIES WITH THE FOLLOWING CONDITIONS:

CASE I: WALL BACKFILL SLOPES DOWN, IS LEVEL, OR SLOPES UP FROM WALL AT 20:1 OR FLATTER SLOPE ALLOWS FOR BACKFILL WHICH WOULD BE LEVEL EXCEPT FOR THE SLOPE REQUIRED TO FACILITATE PROPER DRAINAGE.

CASE II: BACKFILL SLOPES UP STEEPER THAN 20:1, BUT NOT STEEPER THAN 4:1.

CASE III: BACKFILL SLOPES UP STEEPER THAN 4:1, BUT NOT STEEPER THAN 2:1. WHEN "H" IS GREATER THAN 8' (6' FRONT FACE), INCREASE THE EMBEDMENT DEPTH TO 1/4 "H."

SPECIAL DESIGNS SHALL BE REQUIRED WHEN THE FOLLOWING CONDITIONS EXIST:

A. WALL HEIGHT IS GREATER THAN 12'0"
B. WALL IS SURCHARGED WITH DEAD LOAD FILL SLOPES STEEPER THAN 2:1
C. WALL IS SURCHARGED WITH A LIVE LOAD, WITHOUT THE LIMITS OF A 1:1 SLOPE EXTENDING FROM THE BASE OF THE WALL.

AREAS AND VOLUMES HAVE BEEN COMPUTED WITHOUT REDUCTION FOR BEVELED EDGES OR PIPE DRAINS. WHEN A RETAINING WALL VARIES IN HEIGHT, THE PRISMOIDAL FORMULA SHALL BE USED IN COMPUTING VOLUMES. THE FOOTER IS NOT INCLUDED IN THE TABULATED VOLUMES.

1. PLACE BI-AXIAL GEO-GRID UNDER THE BASE OF THE WALL UNLESS ON BEDROCK.
2. ALL CONCRETE SHALL BE 4,000 PSI CONCRETE WITH FIBER REINFORCEMENT
3. THE BASE OF THE FOOTER MUST BE SET AT 24" DEEP (MIN.) OR BELOW LOCAL FROSTLINE (WHICHEVER IS DEEPER)
4. RAISE THE MIDDLE PORTION OF THE SUBDRAIN ~2" TO PUT A SLIGHT GRADE ON PIPE

HEIGHT	BASE	SQ FT	CY/LF
CASE I OR II OR III			
3'-0"	1'-6"	3.7500	0.1389
3'-6"	1'-9"	4.8125	0.1782
4'-0"	2'-0"	6.0000	0.2222
4'-6"	2'-3"	7.3125	0.2708
5'-0"	2'-6"	8.7500	0.3241
5'-6"	2'-9"	10.31285	0.3819
6'-0"	3'-0"	12.0000	0.4444
6'-6"	3'-3"	13.8125	0.5116
7'-0"	3'-6"	15.7500	0.5833
7'-6"	3'-9"	17.8125	0.6597
8'-0"	4'-0"	20.0000	0.7407
8'-6"	4'-3"	22.3125	0.8264
9'-0"	4'-6"	24.7500	0.9167
9'-6"	4'-9"	27.3125	1.0116
CASE I			
10'-0"	5'-0"	30.0000	1.1111
10'-6"	5'-3"	32.8125	1.2153
11'-0"	5'-6"	35.7500	1.3241
11'-6"	5'-9"	38.8125	1.4375
12'-0"	6'-0"	42.0000	1.5556
CASE II OR III			
10'-0"	6'-0"	35.0000	1.2963
10'-6"	6'-3"	38.0625	1.4097
11'-0"	6'-6"	41.2500	1.5278
11'-6"	6'-9"	44.5625	1.6505
12'-0"	7'-0"	48.0000	1.7778

USE WITH AML 30-50-1

CONCRETE GRAVITY WALL- NOTES & QUANTITIES (AML 30-50-2)