THESE CHECKS ARE TEMPORARY!

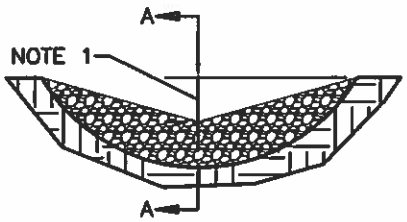

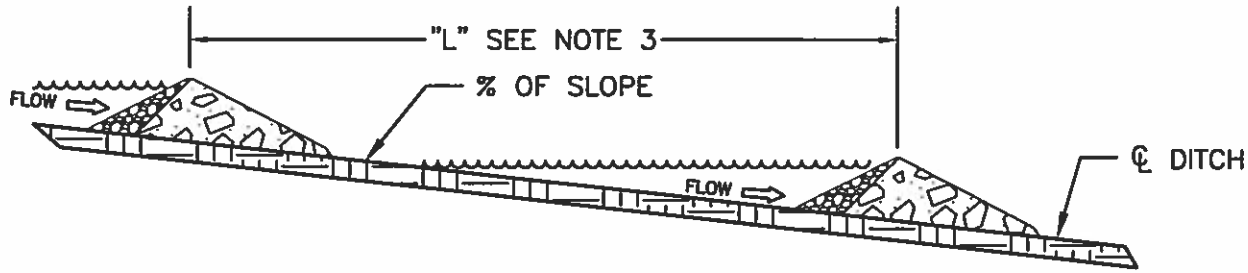

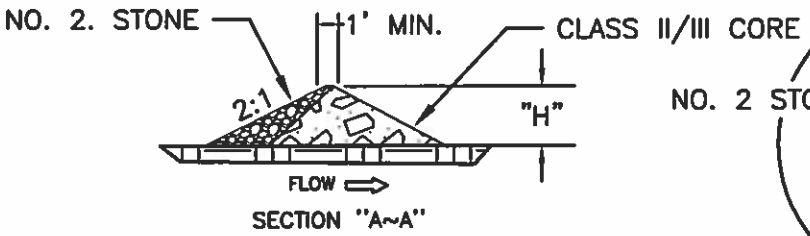

SECTION "A~A"

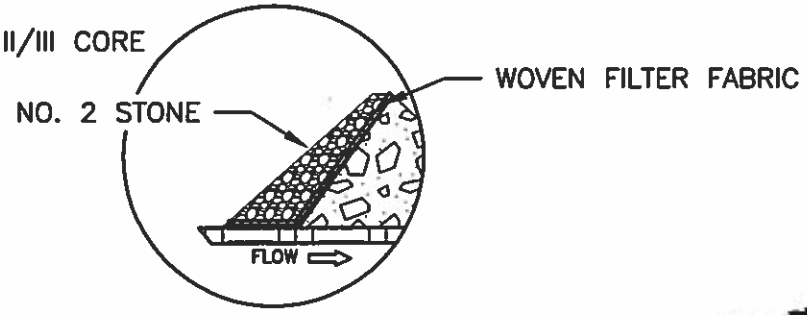

DETAIL "A"

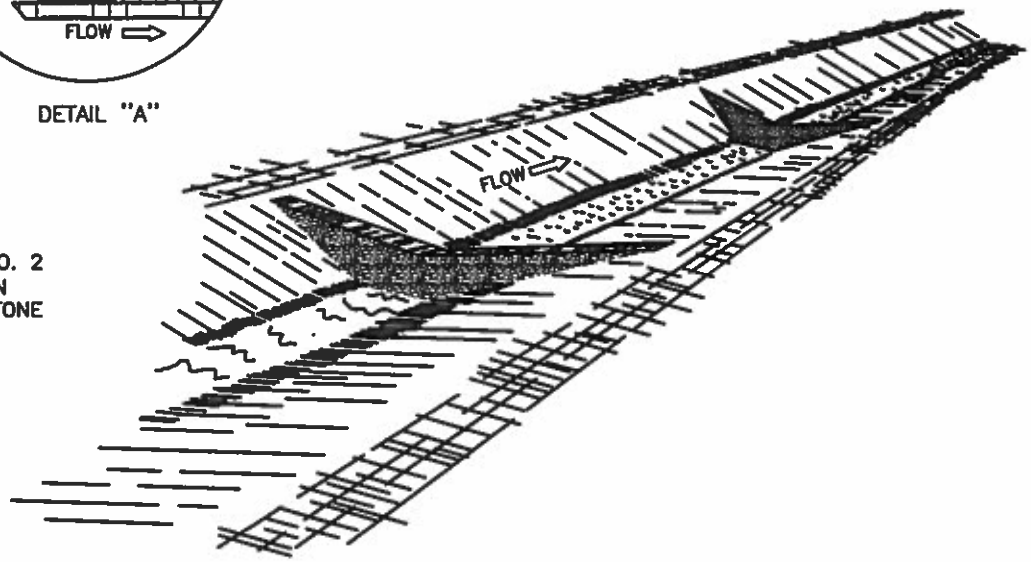

NOTES

1. MIDDLE OF SILT CHECK SHALL BE A MINIMUM OF 1'-0" LOWER THAN SIDES SO FLOW WILL NOT BYPASS CHECK OR ERODE BANKS.
2. UPSTREAM FACE OF ROCK SHALL BE A FOUR INCH MIN. LAYER OF NO. 2 STONE OVER A CLASS II/III CORE. LINE UPSTREAM FACE WITH WOVEN FILTER FABRIC UP TO BOTTOM OF THE V AND COVER FABRIC WITH STONE TO HOLD IN PLACE (SEE DETAIL "A").
3. "L" = "H"/SLOPE OF DITCH.
4. SPACE SILT CHECKS AT LOCATIONS AS SHOWN ON THE PLANS OR AS DIRECTED BY THE ENGINEER.
5. DO NOT PLACE CHECKS IN BLUE LINE STREAMS.

SILT CHECK - ROCK (AML 10-20-2)

KY DAML 3-2014

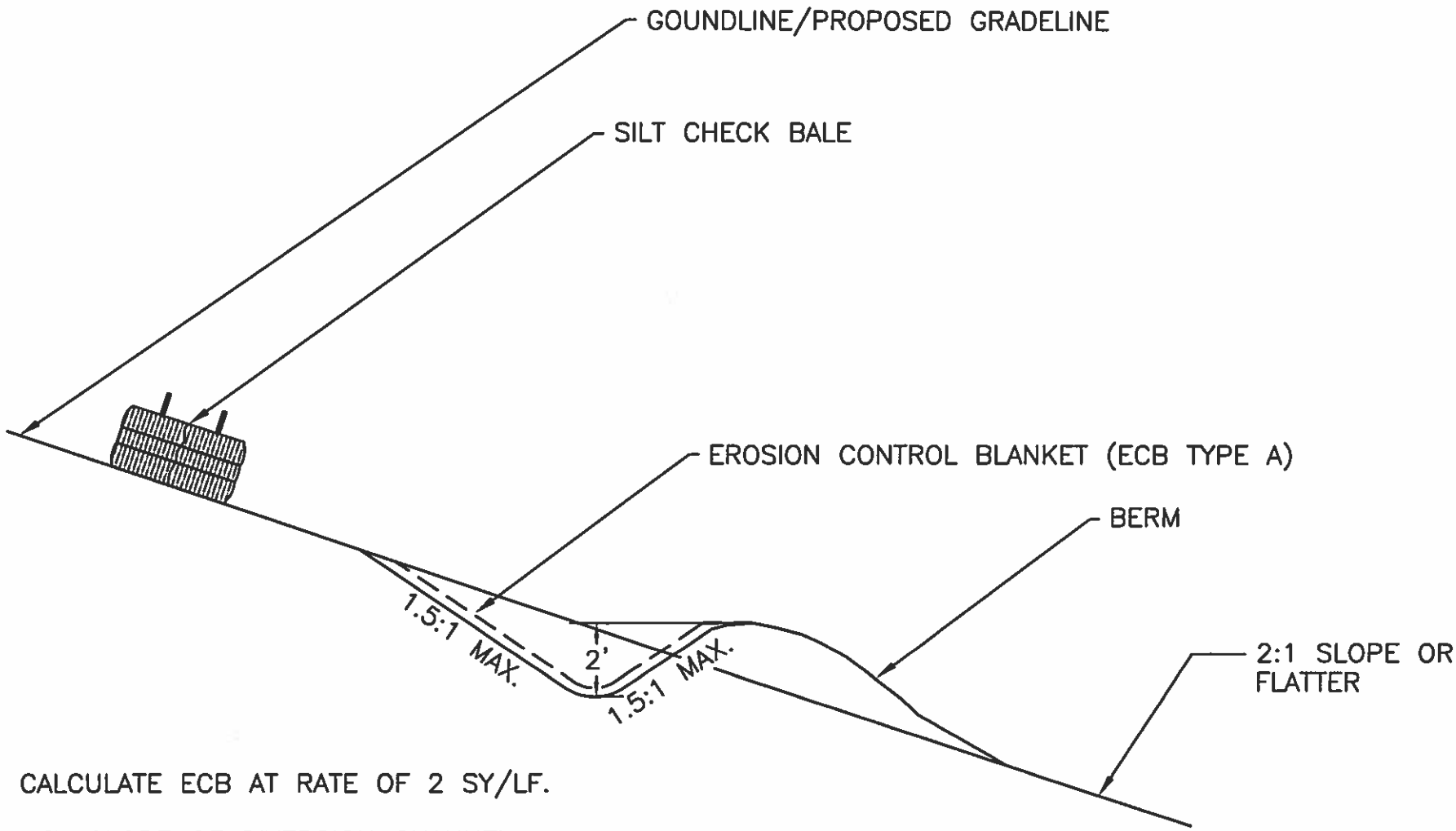

CALCULATE ECB AT RATE OF 2 SY/LF.

BED SLOPE OF DIVERSION CHANNEL SHOULD BE BETWEEN 3% –5% GRADE.

USE WITH AML 21–10–5

ECB DIVERSION W/ BERM (AML 21-10-1)

KY DAML 3–2014

NOTES:

1. ESTIMATE 0.080 CYD CLASS A CONCRETE PER LINEAR FOOT OF DITCH AND 0.398 CYD CONCRETE PER ANCHOR BASED ON MINIMUM DIMENSIONS SHOWN ON THIS DRAWING.
2. THE SECTION SHOWN WITHIN THE MINIMUM DIMENSION IS ESTIMATED AT 0.72 SQ. YD. PER LF.
3. ANY LENGTH OF LONGITUDINAL REINFORCING STEEL WILL BE PERMITTED PROVIDED SUFFICIENT SPLICE IS USED (SEE 'STEEL' SECTION OF AML TECHNICAL SPECIFICATIONS).
4. USE CLASS A (3,500 PSI) CONCRETE WITH FIBER REINFORCEMENT

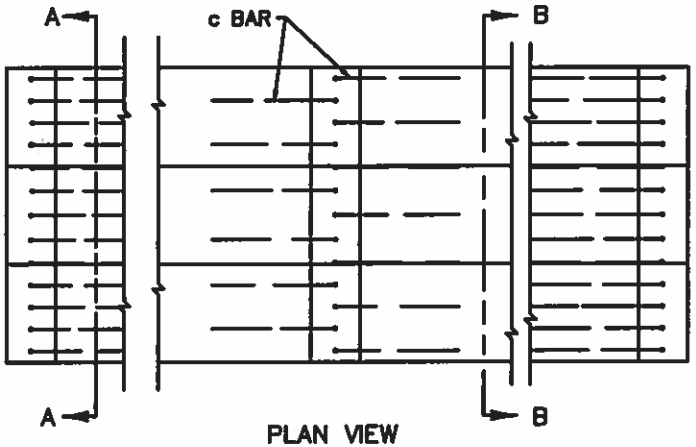

PLAN VIEW

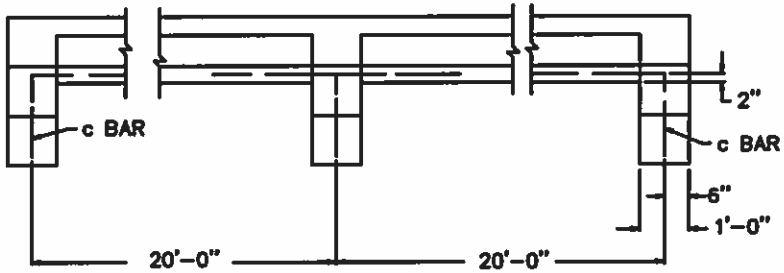

ELEVATION VIEW

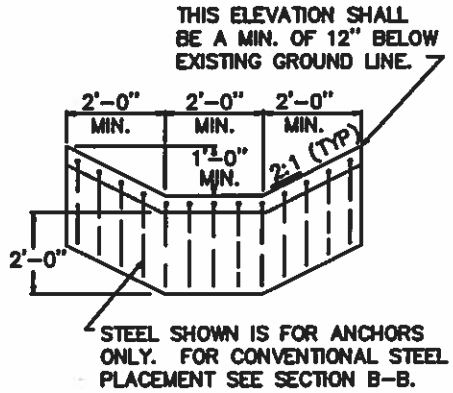

SECTION A-A

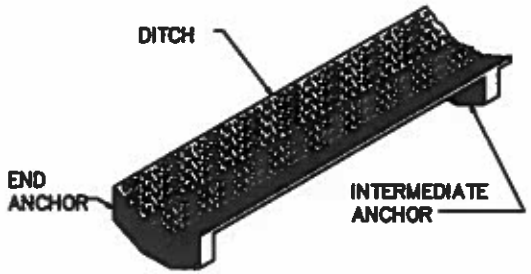

ISOMETRIC VIEW

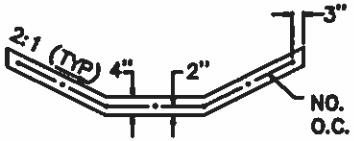

NO. 4 BARS SPACED 1'-0" O.C. LONGITUDINALLY AND TRANSVERSELY THROUGHOUT THE SECTION. (IN ADDITION TO ANCHOR STEEL).

SECTION B-B

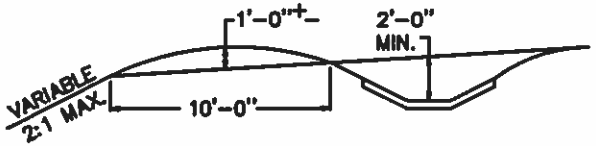

TYPICAL DITCH

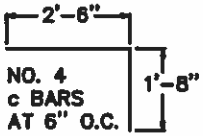

c BAR DETAIL

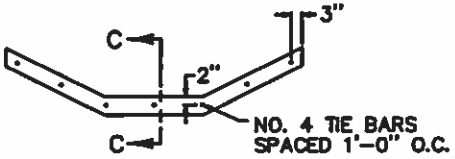

TIE BAR SECTIONAL VIEW

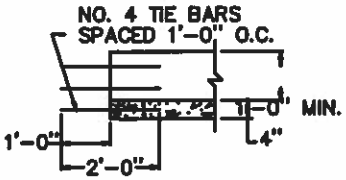

SECTION C-C

APPROX. STEEL QUANTITIES FOR MINIMUM SECTION SHOWN	
END ANCHORS (EACH)	36.19 LBS.
INTERMEDIATE ANCHORS (EACH)	36.19 LBS.
CONSTRUCTION JOINTS (EACH)	9.352 LBS.
BARS PER SQ. YD. OF DITCH	12.047 LBS.

CONCRETE DITCH- TRAPEZOIDAL (AML 21-50-2)

KY DAML 3-2014

CONSTRUCTION JOINTS SHALL BE PLACED A MINIMUM OF 10' & A MAXIMUM OF 20'. SEE "STEEL" SECTION OF AML TECHNICAL SPECIFICATION FOR BAR SPLICES & EMBEDMENT INFORMATION.

ALL STEEL REINFORCEMENT SHALL BE 60 KSI. ALL CONCRETE IS 4,000 PSI WITH FIBER REINFORCEMENT. SECURITY ANCHORS ARE INCIDENTAL. DON'T WELD GRATES CLOSED. ALL REBAR SHALL HAVE 2" MIN CLEARANCE.

INSTALL SIDEWALLS COMPLETELY BELOW GROUNDLINE. UNITS MAY BE PRE-CAST WITH ENGINEER'S PRIOR APPROVAL.

VEHICLE GRATE IS EQUIVALENT OF HOE OF KY TYPE A W/ EMBEDDED FRAME RAIL.

NON-VEHICULAR GRATE IS 1" X 3/16" BEARING BAR SIZE PLAIN BLACK PAINTED, WELDED STEEL BAR GRATING.

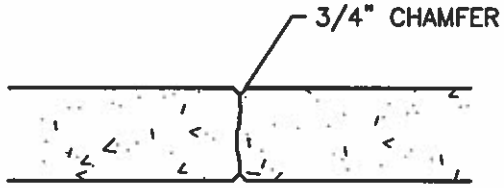

CONSTRUCTION JOINT

SEE AML 30-60-3 FOR ADDITIONAL DETAILS

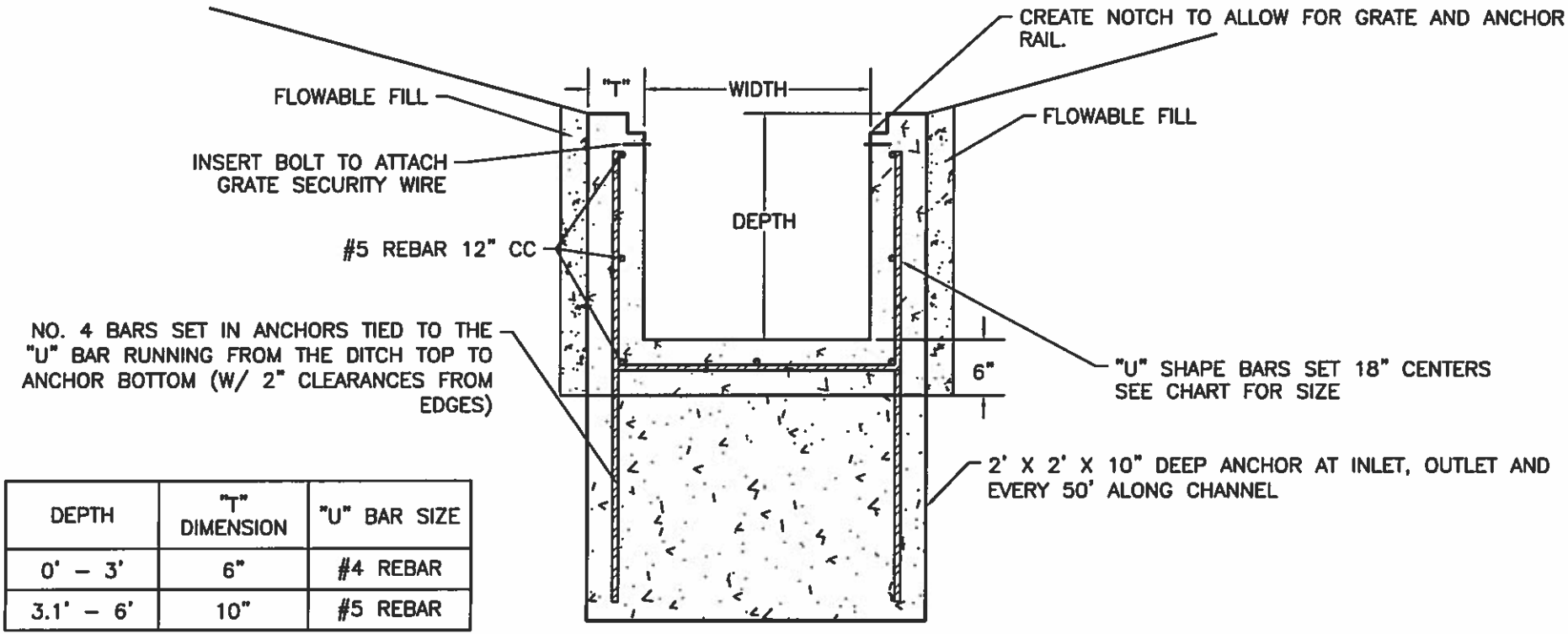

DEPTH	"T" DIMENSION	"U" BAR SIZE
0' – 3'	6"	#4 REBAR
3.1' – 6'	10"	#5 REBAR

USE WITH AML 24-50-1

CONCRETE DITCH- RECTANGULAR w/ GRATE (AML 21-50-3)

KY DAML 4-2014

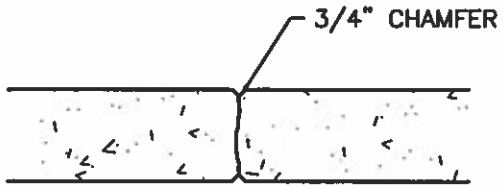

CONSTRUCTION JOINT

SEE AML 30-60-3 FOR ADDITIONAL DETAILS

CONSTRUCTION JOINTS SHALL BE PLACED A MINIMUM OF 10' & A MAXIMUM OF 20'. INSERT WEEP HOLES AT CONSTRUCTION JOINTS.

ALL STEEL REINFORCEMENT SHALL BE 60 KSI. ALL CONCRETE IS 4,000 PSI WITH FIBER REINFORCEMENT. SEE "STEEL" SECTION OF AML TECHNICAL SPECIFICATION FOR BAR SPLICES & EMBEDMENT INFORMATION. ALL REBAR SHALL HAVE 2" MIN CLEARANCE.

INSTALL SIDEWALLS COMPLETELY BELOW GROUNDLINE.

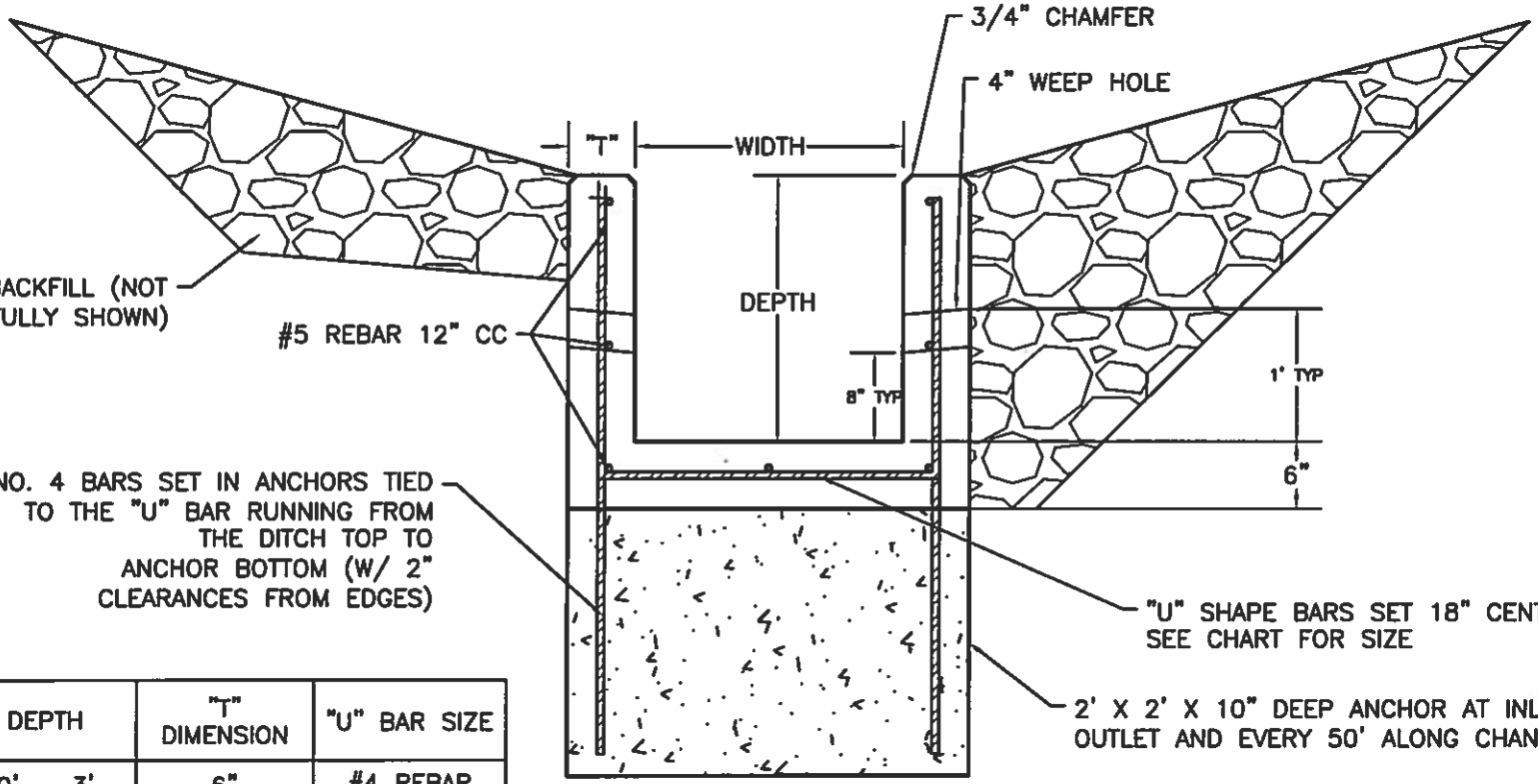

DEPTH	"T" DIMENSION	"U" BAR SIZE
0' – 3'	6"	#4 REBAR
3.1' – 6'	10"	#5 REBAR

CONCRETE DITCH- RECTANGULAR NO GRATE (AML 21-50-4)

KY DAML 4-2014

NOTES:

1. EXCAVATION SHALL BE CONSIDERED INCIDENTAL FOR SUBDRAINS INSTALLED UP TO 5 FT DEEP. FOR SUBDRAINS DEEPER THAN 5 FT, EXCAVATION SHALL BE INCLUDED FOR PAYMENT AS EARTHWORK.
2. SOCK PIPE IS PREFERRED FOR ALL PIPES.
3. WHEN SWITCHING FROM PERFORATED TO NON-PERFORATED PIPE USE A SUBDRAIN COLLAR (AML 21-30-2)
4. SET ON MINIMUM OF 1% GRADE.
5. THE CONSTRUCTION DRAWINGS, NOTES, SPECIAL CONDITIONS MAY REQUIRE A LARGE DIAMETER PIPE THAN SHOWN, THE LARGER PIPE IS STILL INCIDENTAL TO THE SUBDRAIN.
6. TWO MAIN TYPES, IF NOT LISTED ASSUME STANDARD:
   STANDARD: TAKE CLASS II AGGREGATE TO THE SURFACE.
   ALTERNATIVE: COVER CLASS II AGGREGATE WITH FILTER FABRIC AND THEN COVER WITH SUITABLE EARTHEN MATERIAL.

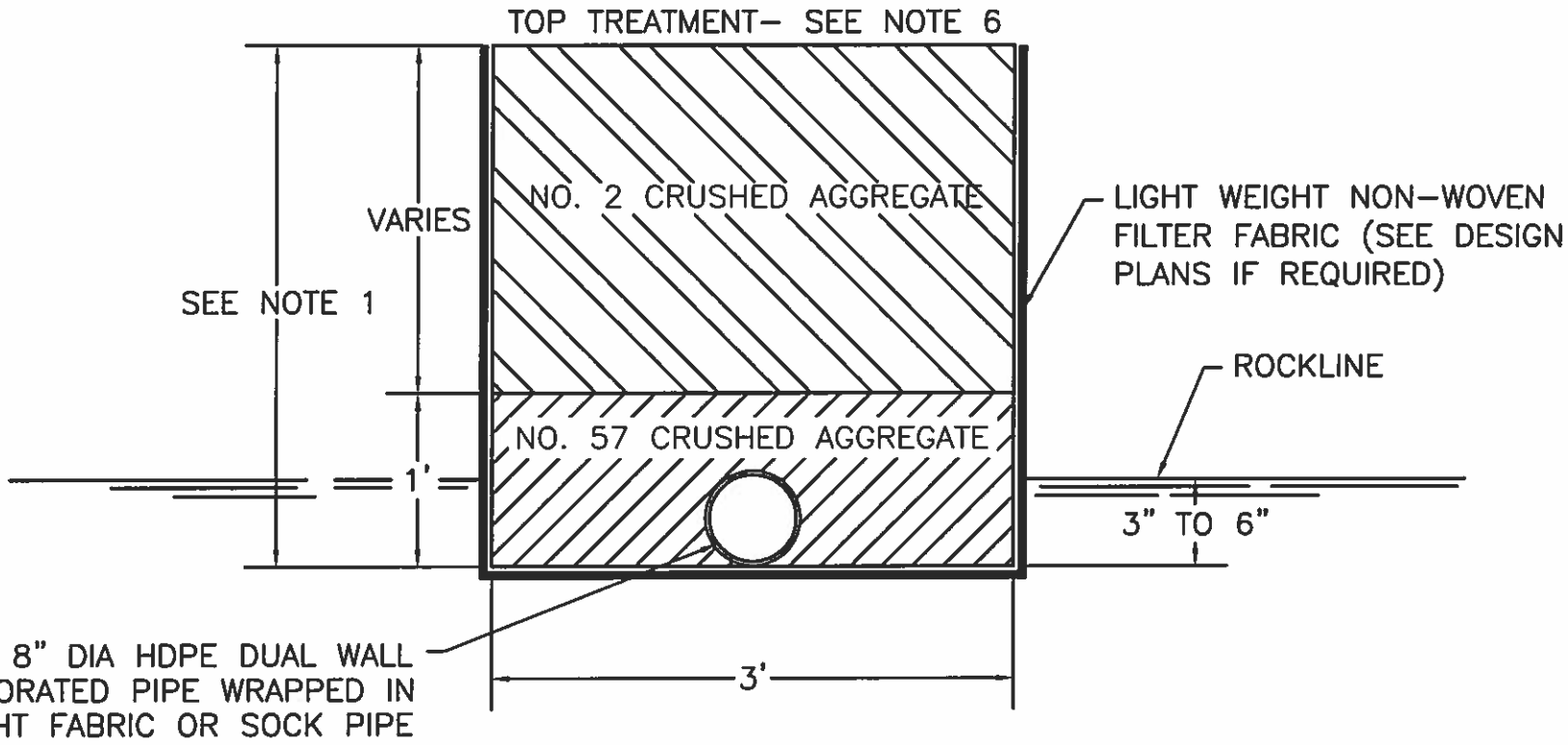

USE WITH AML 22-30-2

SUBDRAIN (AML 22-30-1)

KY DAML 4-2014

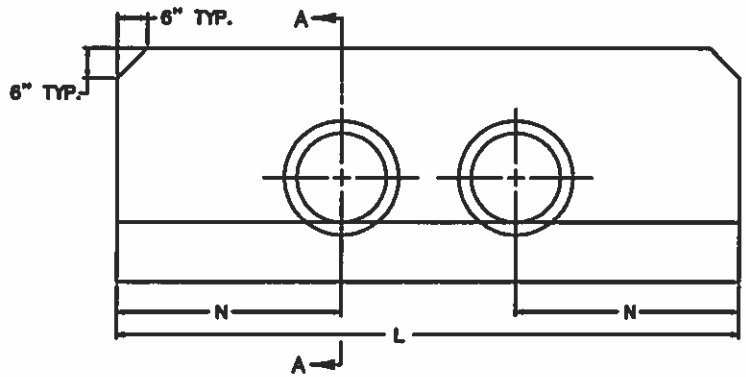

DOUBLE PIPE ELEVATION VIEW

DIMENSIONS AND QUANTITIES									
TYPE	PIPE DIA.	A	B	C	E	L	M	N	CUBIC YARDS CONCRETE PER 2 HEADWALLS
STANDARD DOUBLE	18"	1'-9"	1'-3"	4'-6"	3'-0"	10'-5"	10 3/4"	3'-9"	4.18
	24"	1'-10"	1'-4"	5'-0"	3'-6"	12'-6"	10 3/4"	4'-6"	5.65
STANDARD TRIPLE	18"	1'-9"	1'-3"	4'-6"	3'-0"	13'-4"	10 3/4"	3'-9"	4.87
	24"	1'-10"	1'-4"	5'-0"	3'-6"	16'-0"	10 3/4"	4'-6"	6.68

NOTES:

1. VOLUME DISPLACED BY BARREL OF PIPE HAS BEEN COMPUTED USING INSIDE DIAMETER OF PIPE. NO DEDUCTION HAS BEEN MADE FOR BEVELED EDGES.
2. WHEN HEADWALLS ARE LOCATED AT THE EDGE OF SHOULDER, THE TOP OF THE HEADWALLS SHALL BE PARALLEL TO THE EDGE OF THE SHOULDER.
3. CAST IN PLACE WITH FIBER REINFORCEMENT UNLESS APPROVED OTHERWISE BY THE ENGINEER.
4. ALL EDGES RECEIVE 3/4" CHAMFER.

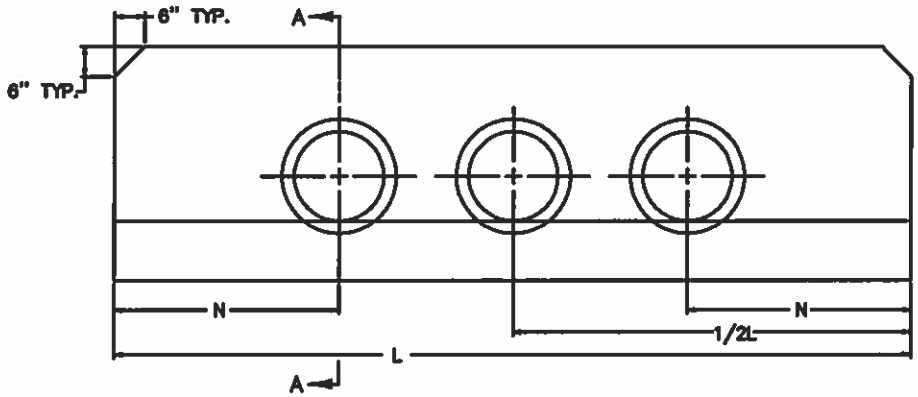

TRIPLE PIPE ELEVATION VIEW

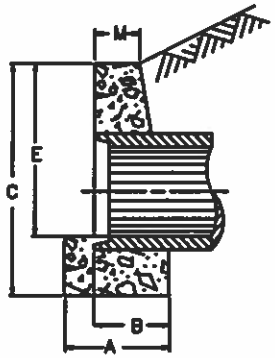

SECTION A–A

USE WITH AML 23–10–11

CONCRETE HEADWALLS- 18"-24" MULTIPLE BARREL (AML 23-20-1)

KY DAML 4–2013

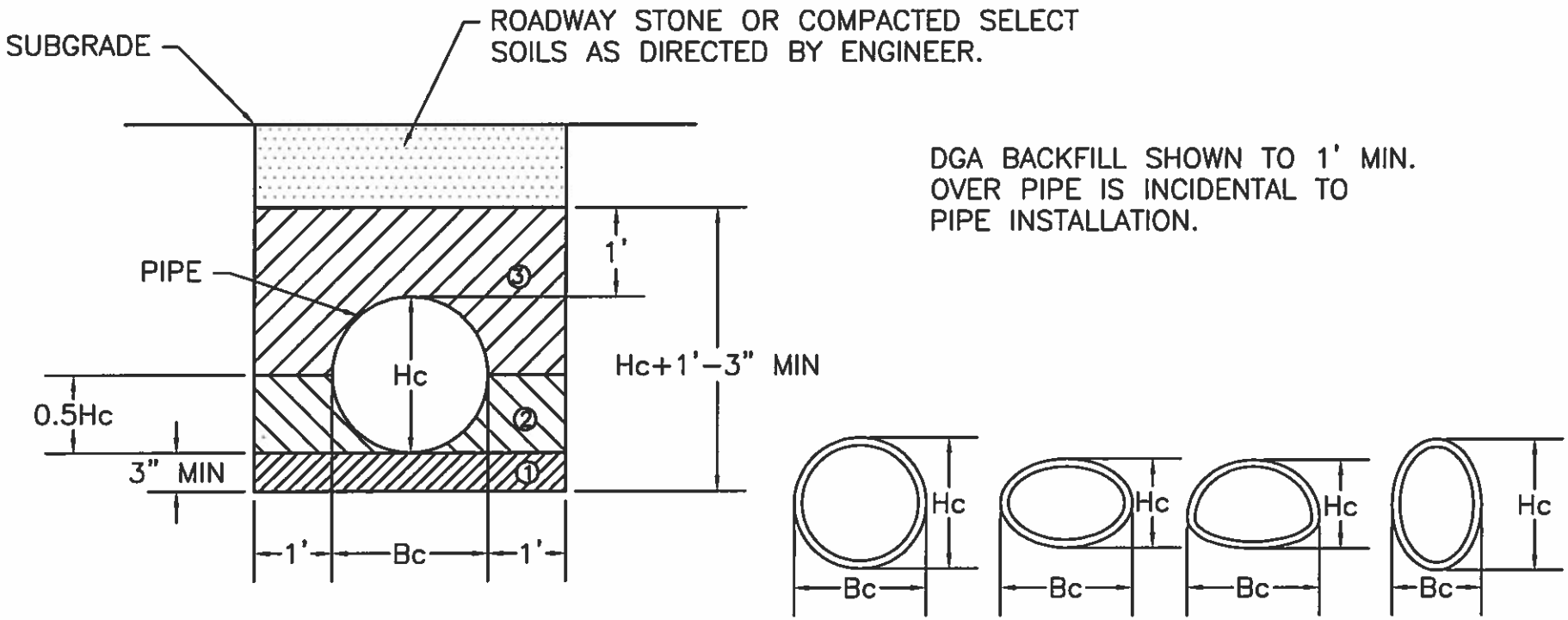

1. UNCOMPACTED DENSE GRADE AGGREGATE (DGA) TO WIDTH AND ELEVATION SHOWN
2. 95% COMPACTED DGA IN LAYERS 6" OR LESS W/ MECHANICAL TAMPERS OR COMPACTORS
3. 85% COMPACTED DGA IN LAYERS 6" OR LESS TO WIDTH AND ELEVATION AS SHOWN W/ MECHANICAL TAMPERS OR COMPACTORS
4. ANCHORED HDPE & RHDPE WITH GUY WIRE ANCHORS AND STRAPS OR EQUIVALENT IF FLOWABLE WILL IS USED INSTEAD OF DGA. ANCHOR PRIOR TO PLACING FLOWABLE FILL.
5. USE FLOWABLE FILL ALL PAVED ROADS WITH REINFORCED CONCRETE PIPE (SEE DETAIL 50-10-4).

PIPE BEDDING (23-50-2)

KY DAML 4-2014

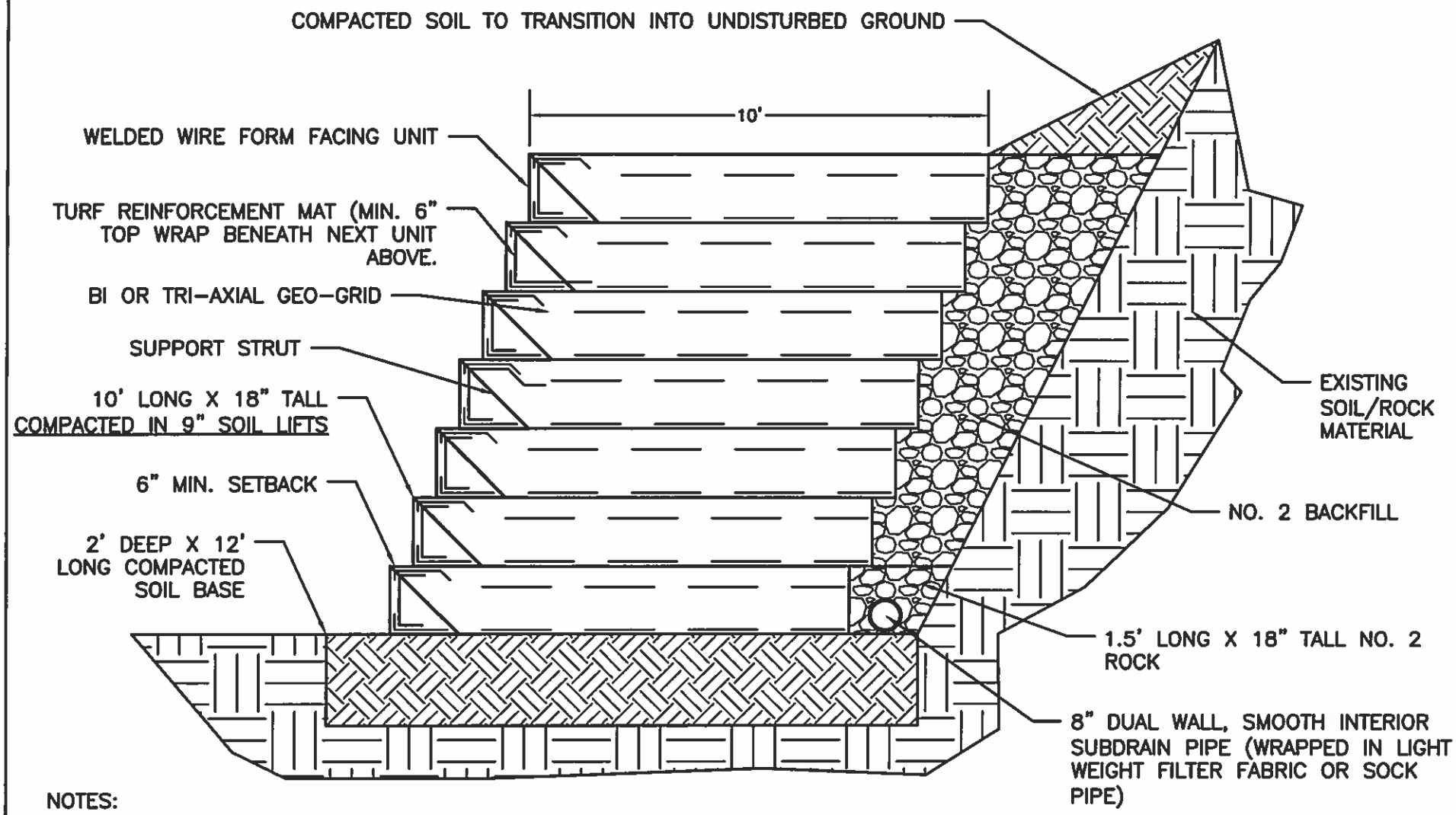

NOTES:

1. FIELD CONDITIONS WILL DICTATE FINAL BACKSLOPE, BUT SHOULD NOT BE MORE THAN 1:2 CUT AND REMAIN STABLE DURING CONSTRUCTION.

2. ALL SOIL RECEIVES 95% PROCTER COMPACTION.

USE WITH AML 30-10-2

WELDED WIRE REINFORCED SOIL WALL (AML 30-10-1)

KY DAML 4-2014

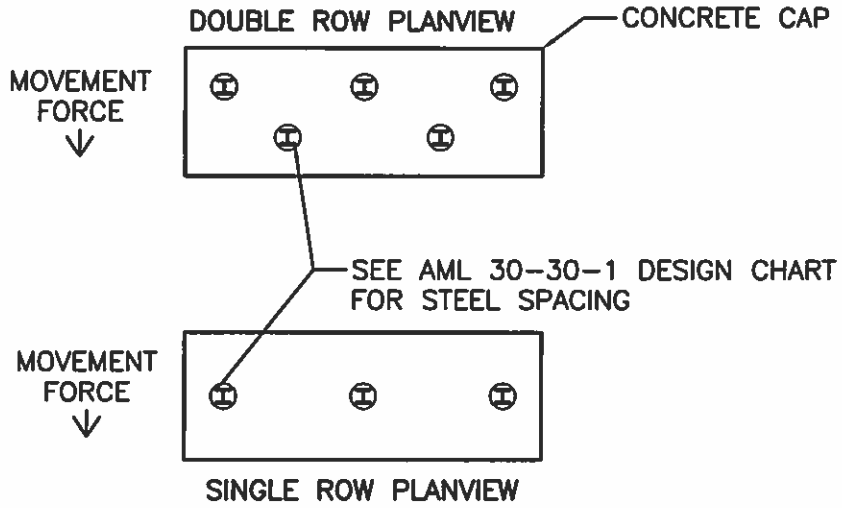

STANDARD "H"= 2 FEET UNLESS NOTED OTHERWISE ON DRAWINGS OR SPECIAL CONDITIONS.

"W" = VARIES BASED ON PILE SIZE + 12"

IF PILES ARE SET IN CONCRETE CAP USED AS A WALL FOUNDATION, THEN THIS DETAIL'S REINFORCEMENT PATTERN SUPERSEDES THE FOOTER DETAIL FOR THAT WALL UNLESS NOTED OTHERWISE ON THE DRAWINGS.

FOR PILES EXTENDING THROUGH THE CAP, SET TRANSVERSE REINFORCEMENT ON 6" CENTERS BETWEEN THE PILES. SEE SECTIONS BELOW FOR LONGITUDINAL SPACING.

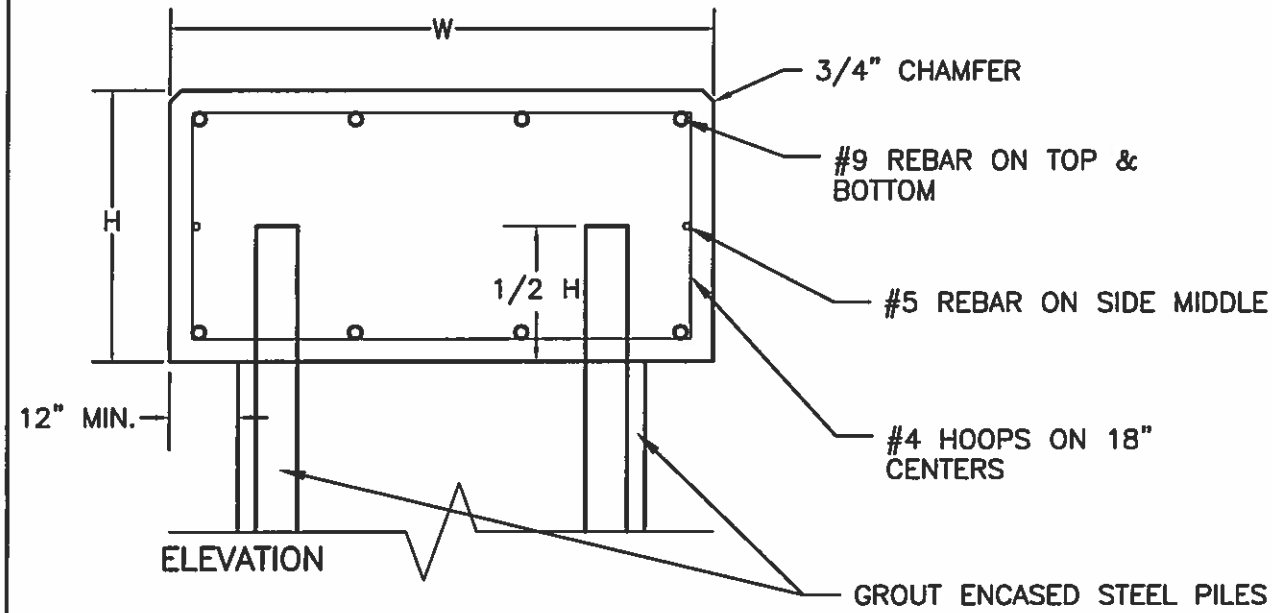

PILES SET IN CONCRETE CAP

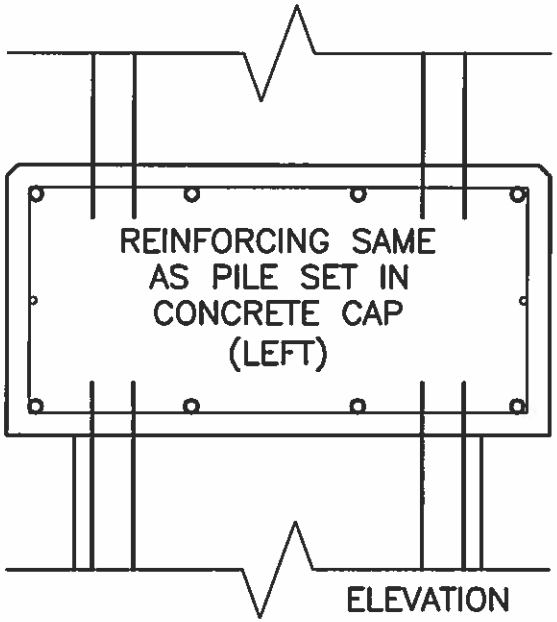

PILES EXTENDING THROUGH CONCRETE CAP

USE WITH AML 30-30-1

STEEL PILES REINFORCED CONCRETE CAP (AML 30-30-2)

KY DAML 4-2014

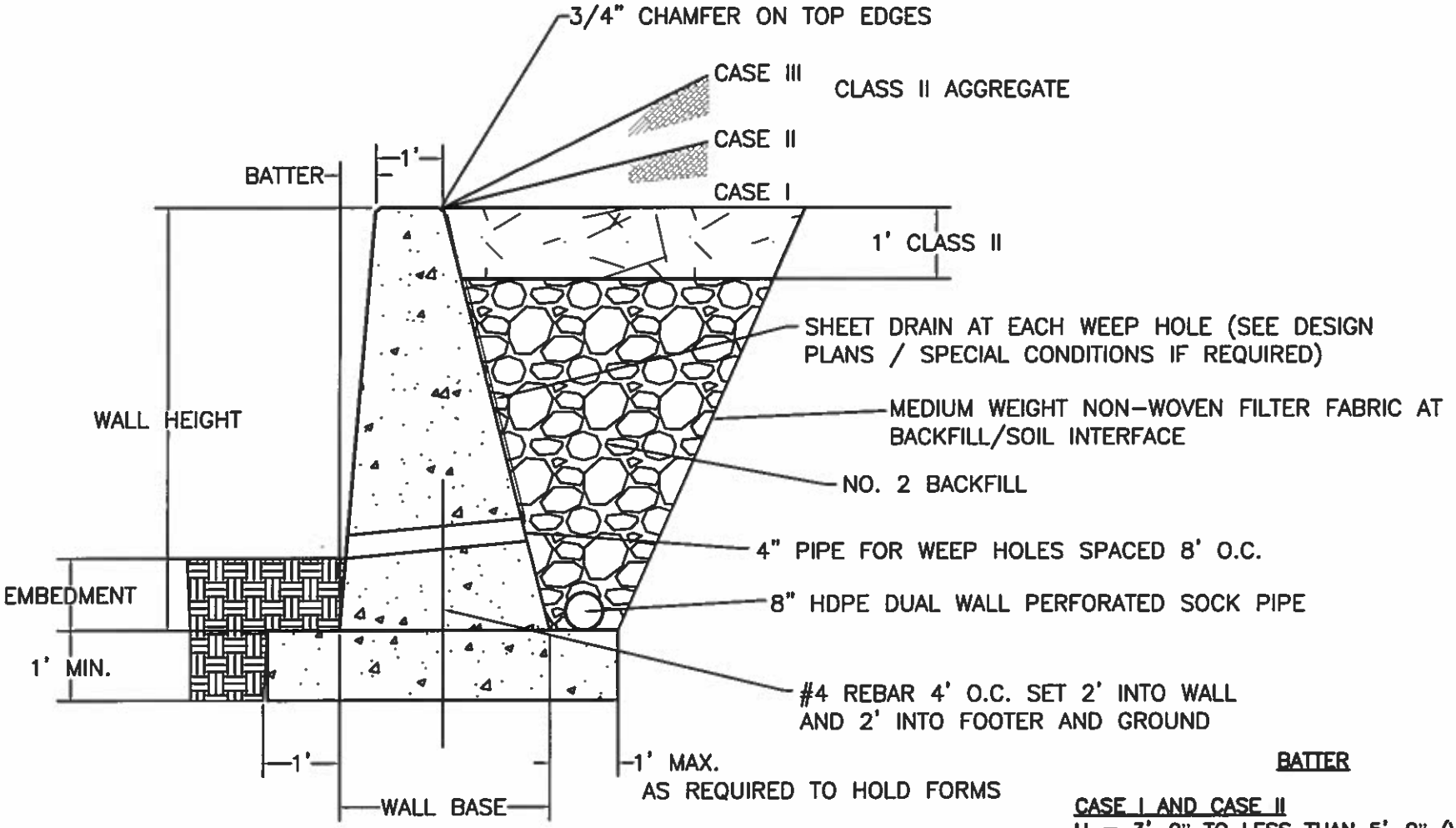

EMBEDMENT

1. MINIMUM EMBEDMENT VALUE FOR FIRM EARTH IS 2'-0".
2. CASE III REQUIRES AN EMBEDMENT OF 1/4 H FOR A WALL OVER 8'.
3. FOR FOOTER SET ON ROCK 1/2 FOOTER DEPTH WILL BE SET IN ROCK.

WALLS TERMINATE INTO HILLSIDE WINGED OR AT 90° ANGLE

BATTER

CASE I AND CASE II
H = 3'-0" TO LESS THAN 5'-0" (VERTICAL)
H = 5'-0" TO LESS THAN 10'-0" (12:1)
H = 10'-0" TO LESS THAN 12'-0" (6:1)

CASE III
H = 3'-0" TO LESS THAN 5'-0" (12:1)
H = 5'-0" TO LESS THAN 12'-0" (6:1)

USE WITH AML 30-50-2

CONCRETE GRAVITY WALL (AML 30-50-1)

KY DAML 4-2014

THE RETAINING WALL DEPICTED ON THIS DRAWING SHALL BE USED WHEN THE HEIGHT ("H" DIMENSION) OF THE WALL IS 12'-0" OR LESS PROVIDED THE FILL COMPLIES WITH THE FOLLOWING CONDITIONS:

CASE I: WALL BACKFILL SLOPES DOWN, IS LEVEL, OR SLOPES UP FROM WALL AT 20:1 OR FLATTER SLOPE ALLOWS FOR BACKFILL WHICH WOULD BE LEVEL EXCEPT FOR THE SLOPE REQUIRED TO FACILITATE PROPER DRAINAGE.

CASE II: BACKFILL SLOPES UP STEEPER THAN 20:1, BUT NOT STEEPER THAN 4:1.

CASE III: BACKFILL SLOPES UP STEEPER THAN 4:1, BUT NOT STEEPER THAN 2:1. WHEN "H" IS GREATER THAN 8' (6' FRONT FACE), INCREASE THE EMBEDMENT DEPTH TO 1/4 "H."

SPECIAL DESIGNS SHALL BE REQUIRED WHEN THE FOLLOWING CONDITIONS EXIST:

A. WALL HEIGHT IS GREATER THAN 12'0"
B. WALL IS SURCHARGED WITH DEAD LOAD FILL SLOPES STEEPER THAN 2:1
C. WALL IS SURCHARGED WITH A LIVE LOAD, WITHOUT THE LIMITS OF A 1:1 SLOPE EXTENDING FROM THE BASE OF THE WALL.

AREAS AND VOLUMES HAVE BEEN COMPUTED WITHOUT REDUCTION FOR BEVELED EDGES OR PIPE DRAINS. WHEN A RETAINING WALL VARIES IN HEIGHT, THE PRISMOIDAL FORMULA SHALL BE USED IN COMPUTING VOLUMES. THE FOOTER IS NOT INCLUDED IN THE TABULATED VOLUMES.

1. PLACE BI-AXIAL GEO-GRID UNDER THE BASE OF THE WALL UNLESS ON BEDROCK.
2. ALL CONCRETE SHALL BE 4,000 PSI CONCRETE WITH FIBER REINFORCEMENT
3. THE BASE OF THE FOOTER MUST BE SET AT 24" DEEP (MIN.) OR BELOW LOCAL FROSTLINE (WHICHEVER IS DEEPER)
4. RAISE THE MIDDLE PORTION OF THE SUBDRAIN ~2" TO PUT A SLIGHT GRADE ON PIPE

WALL HEIGHT (EXCLUDING FOOTER)	WALL BASE (EXCLUDING FOOTER)	FOOTER CONCRETE	WALL CONCRETE
		CY/LF	CY/LF
CASE I OR II OR III			
3'-0"	1'-6"	0.13	0.14
3'-6"	1'-9"	0.14	0.18
4'-0"	2'-0"	0.15	0.23
4'-6"	2'-3"	0.16	0.27
5'-0"	2'-6"	0.17	0.32
5'-6"	2'-9"	0.18	0.40
6'-0"	3'-0"	0.19	0.48
6'-6"	3'-3"	0.19	0.55
7'-0"	3'-6"	0.20	0.63
7'-6"	3'-9"	0.21	0.71
8'-0"	4'-0"	0.22	0.78
8'-6"	4'-3"	0.23	0.86
9'-0"	4'-6"	0.24	0.94
9'-6"	4'-9"	0.25	1.01
CASE I			
10'-0"	5'-0"	0.26	1.11
10'-6"	5'-3"	0.27	1.22
11'-0"	5'-6"	0.28	1.33
11'-6"	5'-9"	0.29	1.44
12'-0"	6'-0"	0.30	1.56
CASE II OR III			
10'-0"	6'-0"	0.30	1.3
10'-6"	6'-3"	0.31	1.42
11'-0"	6'-6"	0.31	1.54
11'-6"	6'-9"	0.32	1.66
12'-0"	7'-0"	0.33	1.78

USE WITH AML 30-50-1

CONCRETE GRAVITY WALL- NOTES & QUANTITIES (AML 30-50-2)

NOTE: ALL CONCRETE 4,000 PSI

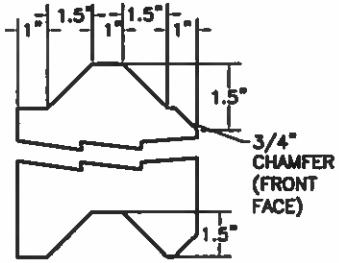

PRECAST CONCRETE LAGGING KEY

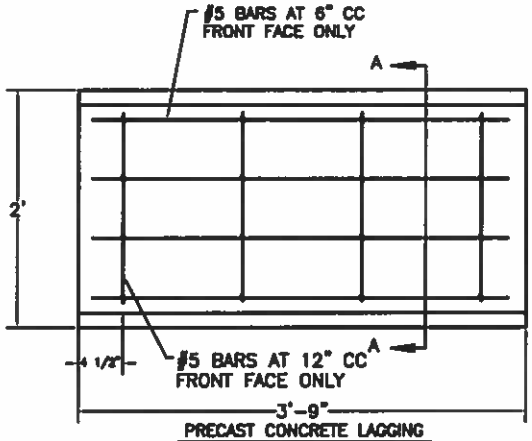

PRECAST CONCRETE LAGGING

NOTE:

SEE PROFILE SHEET AND CROSS SECTIONS OF THE DESIGN DRAWINGS FOR SPECIFIC WALL HEIGHTS.

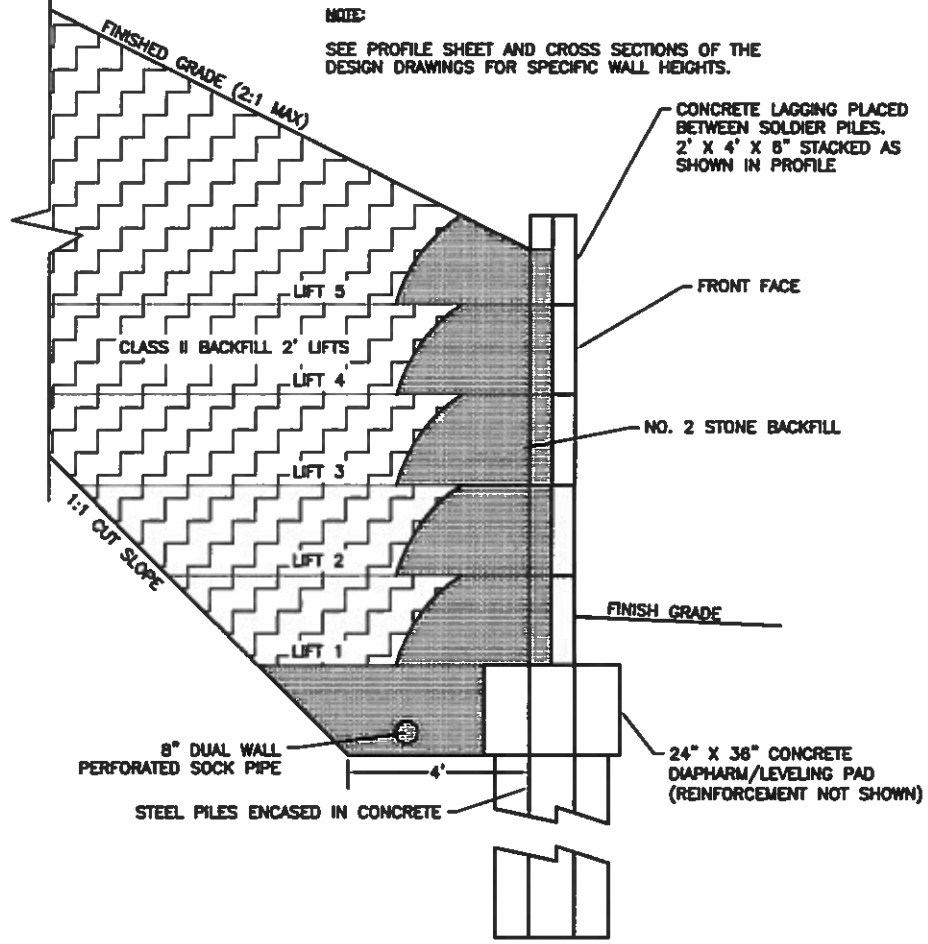

SECTION – PILE AND LAGGING WALL

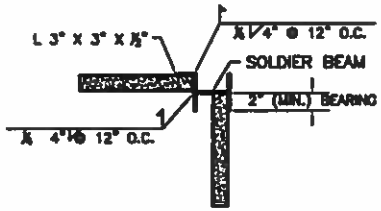

INSIDE CORNER LAGGING

NTS

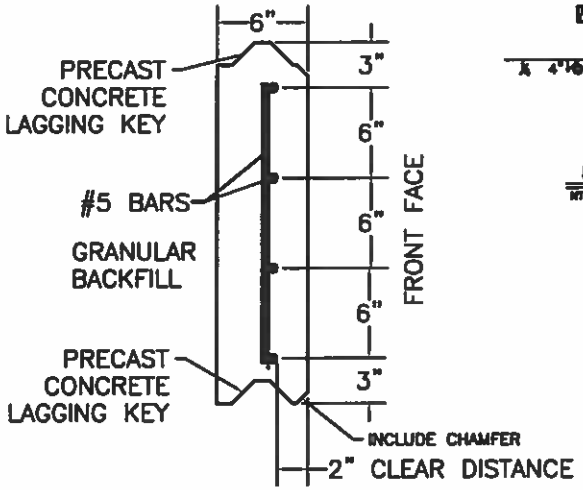

SECTION A–A

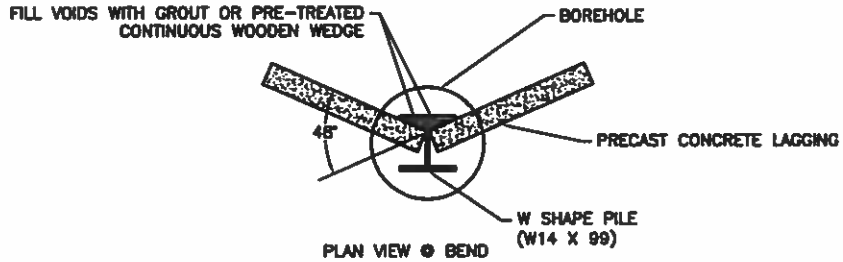

PLAN VIEW @ BEND

FLANGE PRESSURE DISTRIBUTION DETAIL

NTS

USE WITH AML 30–70–2

PILE AND LAGGING WALL- SHEET 1 (AML 30-70-1)

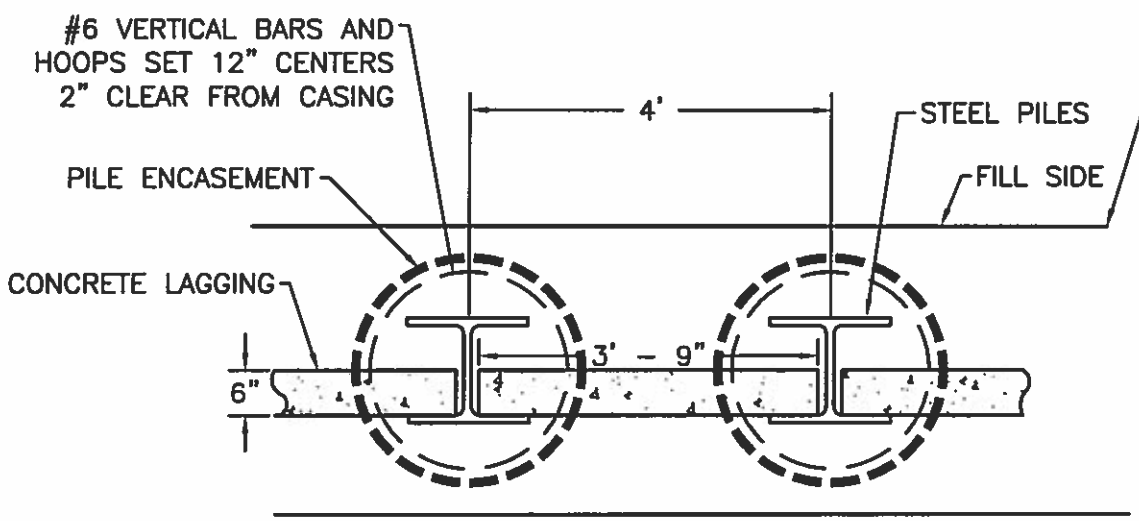

PLAN VIEW
NTS

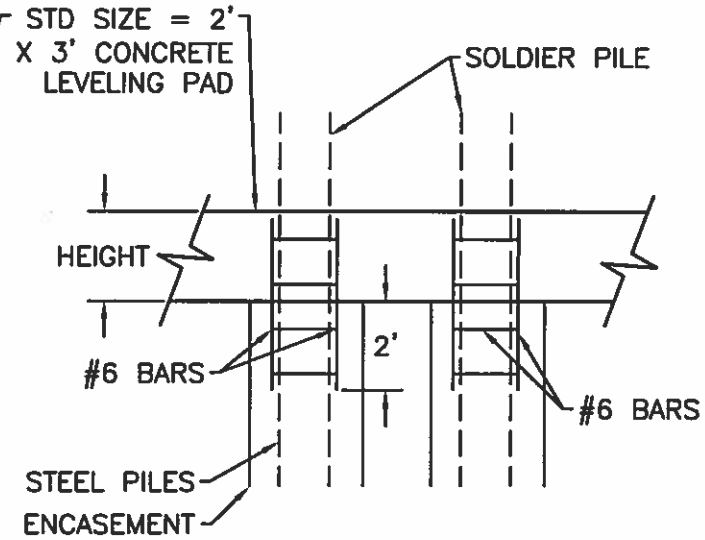

ELEVATION
NTS

NOTE:

THE CONTRACTOR SHALL NOTIFY THE ENGINEER PRIOR TO FORMING AND/OR POURING ANY PANELS SUCH THAT THE ENGINEER MAY HAVE A REPRESENTATIVE ON SITE PRIOR TO AND DURING THE POURING PROCESS.

ALL STEEL REINFORCEMENT SHALL BE ACCURATELY PLACED IN THE FORMS VERTICALLY AND HORIZONTALLY OF THE THE POSITIONS SHOWN. THE REINFORCEMENT CAGE (REAR) SHALL BE HELD FIRMLY IN PLACE BY THE USE OF CHAIRS AND WIRE TIES DURING THE VIBRATION, AGITATION, AND CURING CYCLES OF THE CONCRETE TO PREVENT MOVEMENT. WIRE TIES SHALL BE USED IN THE FABRICATION OF THE REINFORCEMENT CAGE (REBAR). ALL STEEL REINFORCEMENT SHALL BE 60 KSI. WELDING SHALL NOT BE PERMITTED.

FOR SPLICES SEE AML 30-70-3 AND "STEEL" SECTION OF TECHNICAL SPECIFICATIONS.

THE NO. 6 BARS TIE THE COLUMN AND FOOTER TOGETHER. SEE AML 30-30-2 FOR THE CONCRETE LEVELING PAD REINFORCEMENT DETAILS. STANDARD LEVELING PAD SIZE IS 2' H X 3' W.

USE WITH AML 30-70-1

PILE AND LAGGING WALL- SHEET 2 (AML 30-70-2)

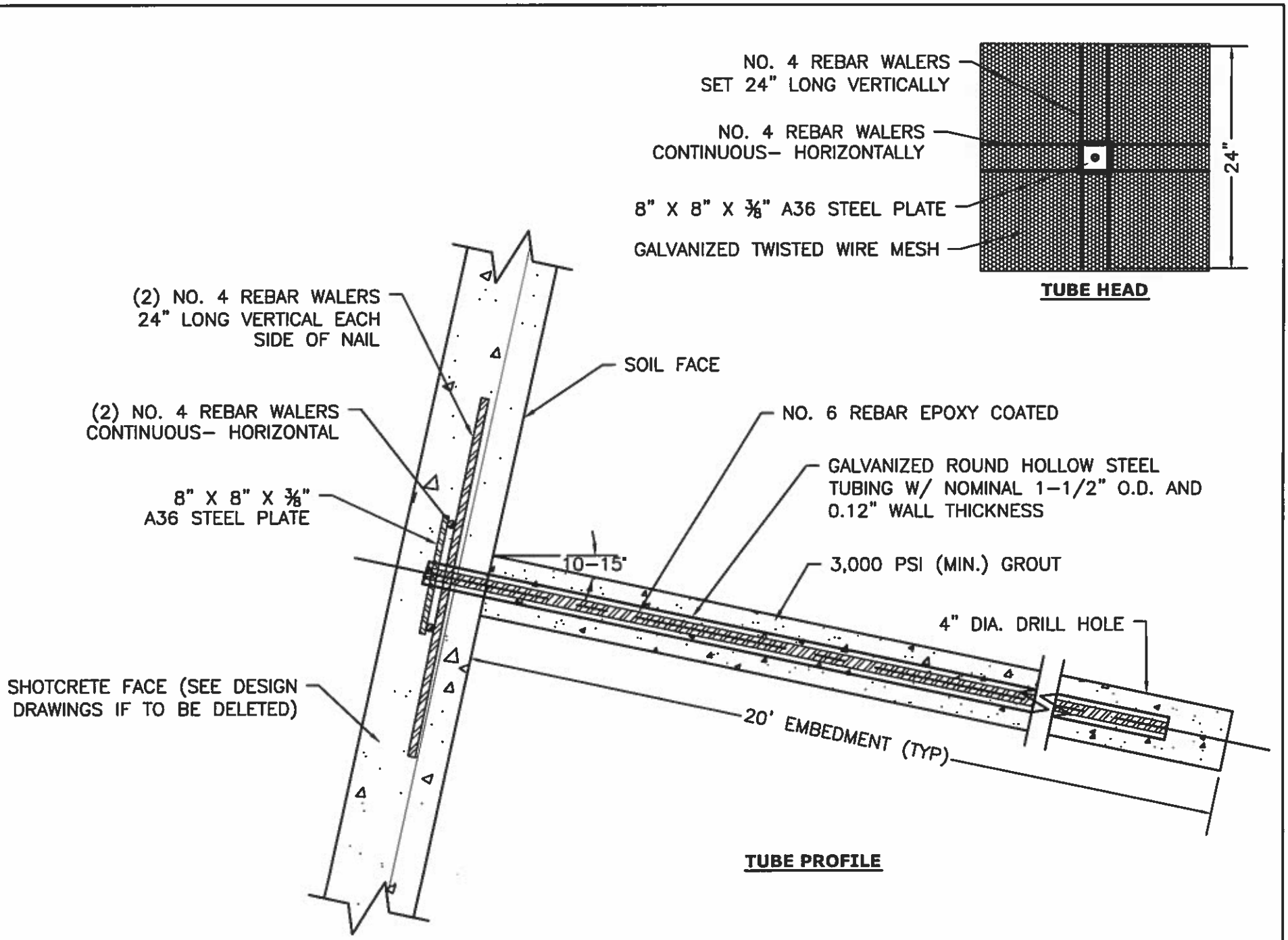

SOIL NAILS- SHEET 1 (AML 30-90-1)

KY DAML 4–2014

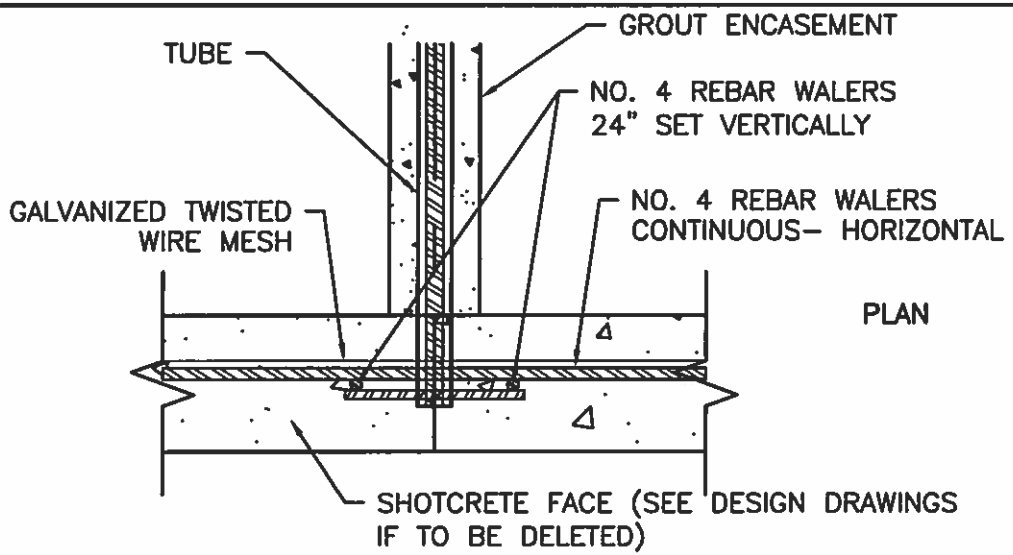

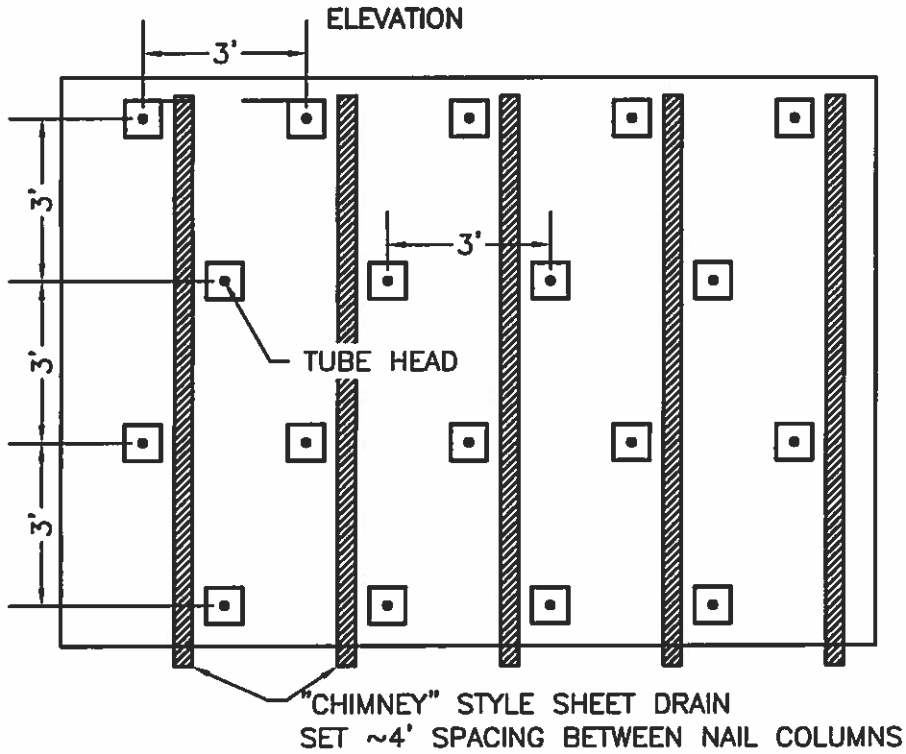

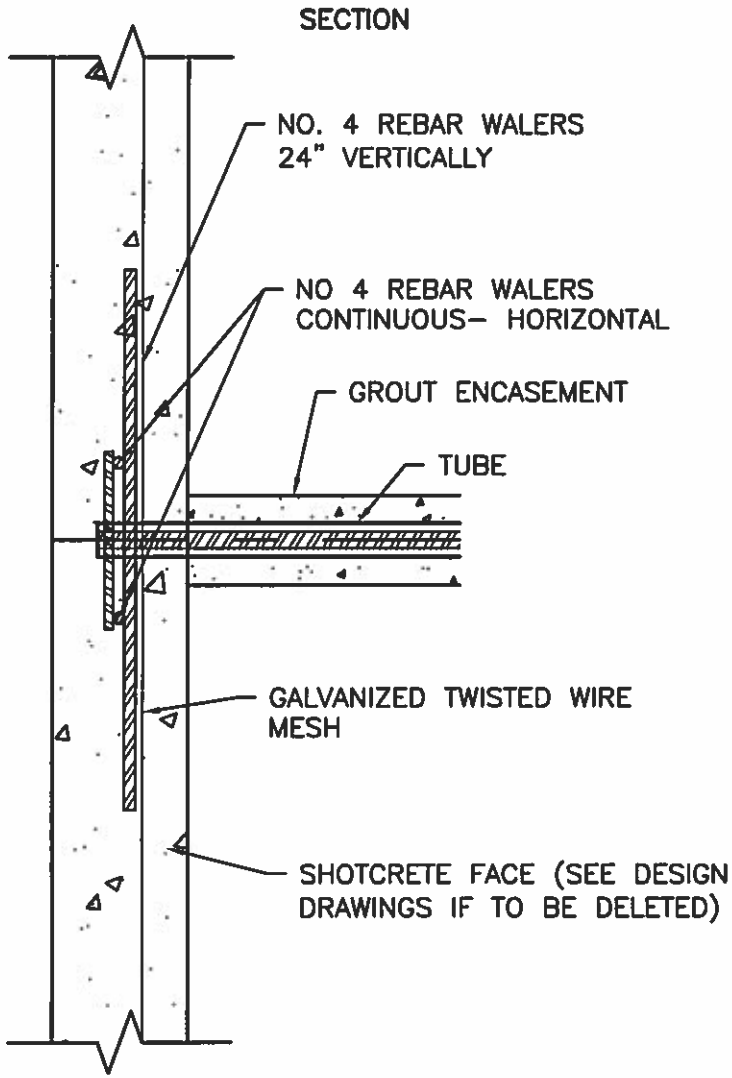

SOIL NAILS- SHEET 2 (AML 30-90-2)

KY DAML 4–2014

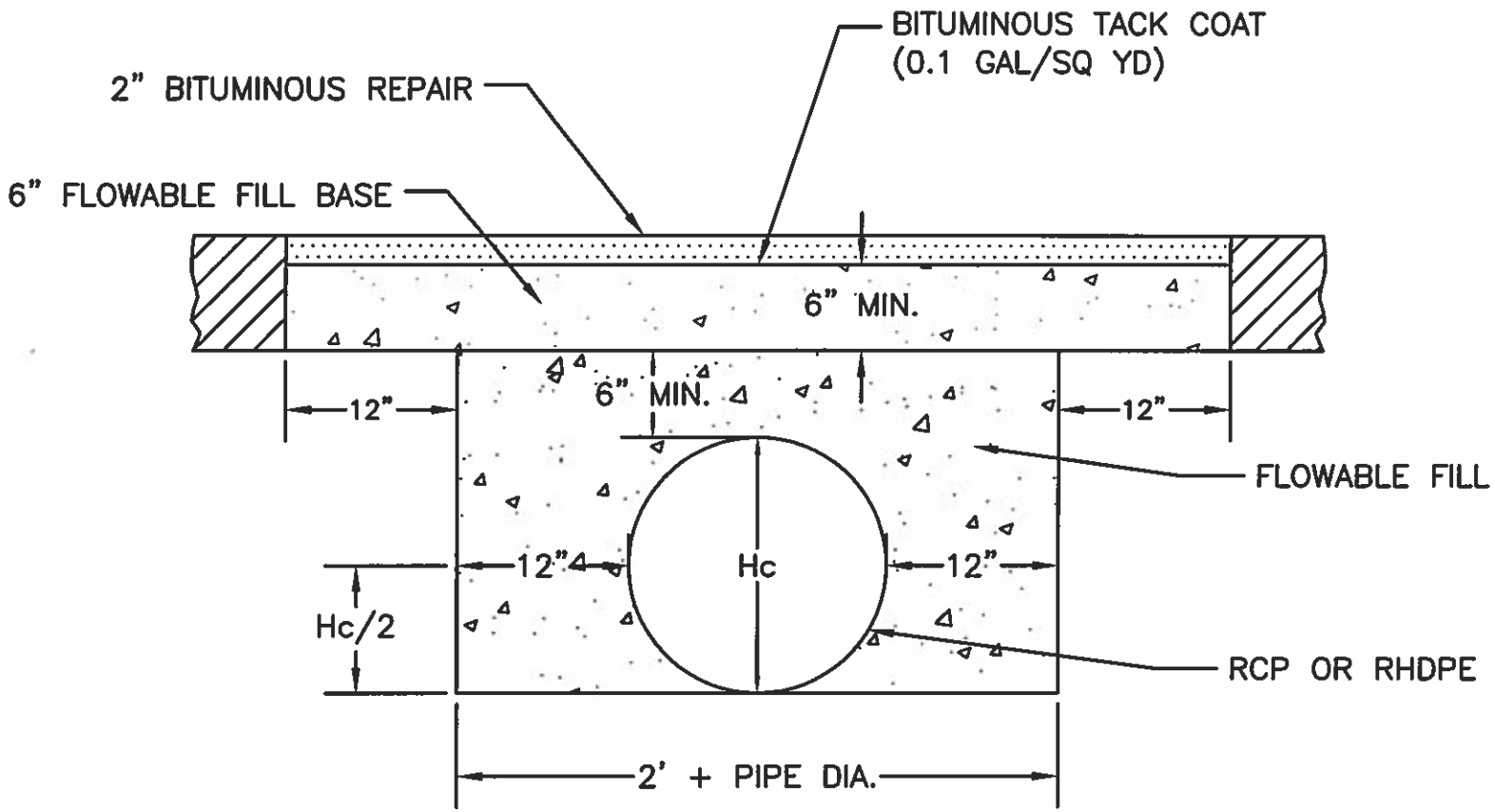

PROVIDE STEEL PLATING TO COVER TRENCH UNTIL PAVEMENT REPAIRED (INCIDENTAL TO PIPE INSTALLATION).

BITUMINOUS PAVEMENT RESTORATION W/PIPE (AML 50-10-4)

KY DAML 4-2014

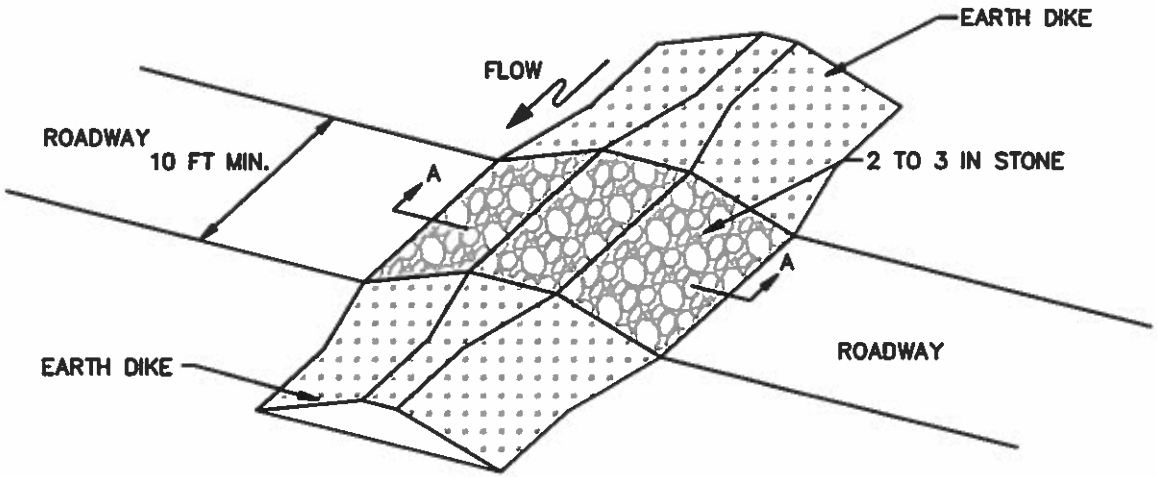

ISOMETRIC VIEW

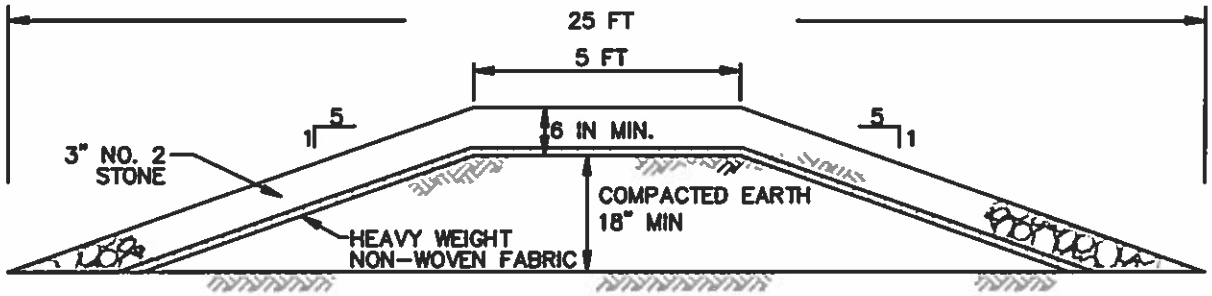

SECTION A–A

CONSTRUCTION SPECIFICATIONS

1. USE MINIMUM WIDTH OF 10 FEET TO ALLOW FOR VEHICULAR PASSAGE.
2. PLACE HEAVY WEIGHT NONWOVEN GEOTEXTILE OVER THE EARTH MOUND PRIOR TO PLACING STONE.
3. PLACE 3" NO. 2 STONE OVER THE LENGTH AND WIDTH OF THE MOUNTABLE BERM.
4. MAINTAIN LINE, GRADE, AND CROSS SECTION. ADD STONE OR MAKE OTHER REPAIRS AS CONDITIONS DEMAND TO MAINTAIN SPECIFIED DIMENSIONS. REMOVE ACCUMULATED SEDIMENT AND DEBRIS. MAINTAIN POSITIVE DRAINAGE.

MOUNTABLE BERM (AML 50-10-9)

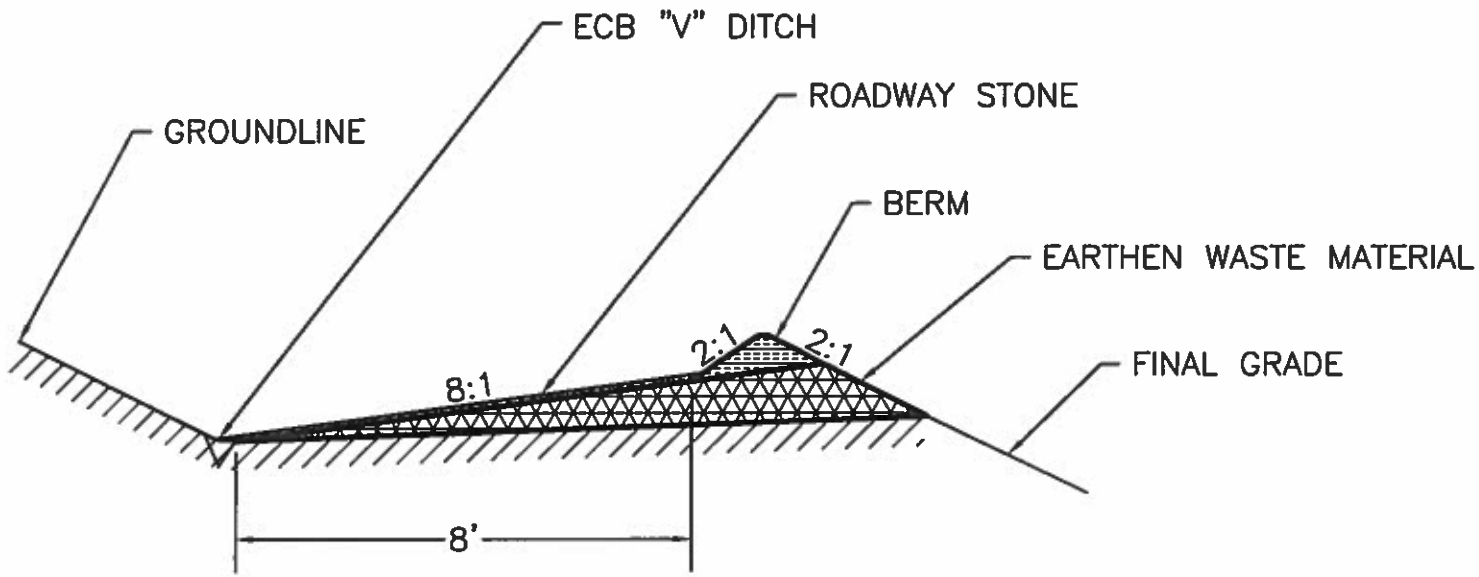

ACCESS ROAD (AML 50-10-10)

KYDAML 4-2014