SECTION 10- SILT CONTROL

FINAL NAME	2013 No.	Updated
SILT BARRIER- BALE	AML 10-10-1	
SILT BARRIER- FENCE	AML 10-10-2	
SILT CHECK- GEOTEXTILE BAGS	AML 10-20-1	
SILT CHECK- ROCK	AML 10-20-2	
SILT TRAP- TYPE A TEMPORARY	AML 10-30-1	
SILT TRAP- TYPE B TEMPORARY	AML 10-30-2	
SILT TRAP- TYPE A & B PERMANENT	AML 10-30-3	
GEOTEXTILE FILTER BAG	AML 10-30-4	
GABION WEIR	AML 10-40-1	
PERIMETER DIKE & SWALE	AML 10-50-1	

SECTION 21- DITCHES

FINAL NAME	2013 No.	Updated
ECB DIVERSION W/ BERM	AML 21-10-1	
ECB DITCH- "V"	AML 21-10-2	
ECB DITCH- SWALE	AML 21-10-3	12-2013
ECB DITCH- FLAT BOTTOM	AML 21-10-4	12-2013
ECB CHANNEL INSTALLATION	AML 21-10-5	
CLASS II DITCH- FLAT BOTTOM	AML 21-20-1	
CLASS III DITCH- FLAT BOTTOM	AML 21-20-2	
INLET AND OUTLET DITCH TREATMENT	AML 21-20-3	
FLEXIBLE CONCRETE CHANNEL LINING	AML 21-30-1	
GABION DITCH- "V"	AML 21-40-1	
GABION DITCH- TRAPEZOIDAL 3', 6', 9' WIDTH	AML 21-40-2	
GABION DITCH- RECTANGULAR 4' FLAT BOTTOM EVEN SIDE HEIGHTS	AML 21-40-3	
GABION DITCH- RECTANGULAR 4' FLAT BOTTOM UNEVEN SIDE HEIGHTS	AML 21-40-4	
GABION DITCH- RECTANGULAR 6' & 8' FLAT BOTTOM	AML 21-40-5	
CONCRETE DITCH- SWALE	AML 21-50-1	10-2013
CONCRETE DITCH- TRAPAZOIDAL	AML 21-50-2	
CONCRETE DITCH- RECTANGULAR	AML 21-50-3	10-2013
EXCAVATED ROCK DITCHES	AML 21-60-1	
ECB ANCHOR- SWALE DITCH SEAMS	AML 21-70-1	9-2013
ECB ANCHOR- FB DITCH SEAMS	AML 21-70-2	9-2013
GABION DITCH ANCHORS	AML 21-70-3	
CONCRETE WEIR / ANCHORS	AML 21-70-4	

SECTION 22- ROCK DRAINS

FINAL NAME	2013 No.	Updated
ROCK TOE BUTTRESS & DRAIN- TYPE 1	AML 22-10-1	
ROCK TOE BUTTRESS & DRAIN- TYPE 2	AML 22-10-2	
ROCK CORE DRAIN	AML 22-20-1	
SUBDRAIN	AML 22-30-1	
SUBDRAIN COLLAR	AML 22-30-2	
COMBINATION ECB DITCH-DRAIN	AML 22-30-3	4-2013
COMBINATION ROCK DITCH-DRAIN	AML 22-30-4	9-2013

SECTION 23- CUVLERTS, HEADWALLS, JOINTS, ANCHORS

FINAL NAME	2013 No.	Updated
CONCRETE HEADWALLS- 12"-27" CIRCULAR STANDARD & "ELL"	AML 23-10-1	
CONCRETE HEADWALLS- 12"-27" ELLIPTICAL STANARD & "ELL"	AML 23-10-2	
CONCRETE HEADWALLS- 12"-27" DIMENSIONS AND QUANTITIES	AML 23-10-3	
CONCRETE HEADWALLS- U-TYPE	AML 23-10-4	
CONCRETE HEADWALLS- 12"-21" SLOPED & PARALLEL	AML 23-10-5	
CONCRETE HEADWALLS- 12"-27" SLOPED & FLARED	AML 23-10-6	
CONCRETE HEADWALLS- ≥30" PIPE	AML 23-10-7	
CONCRETE HEADWALLS- ≥30" PIPE DIMENSIONS	AML 23-10-8	
CONCRETE HEADWALLS- ≥30" PIPE REINFORCEMENT	AML 23-10-9	
CONCRETE HEADWALL- DISSIPATORS	AML 23-10-10	
DISCHARGE AREA EROSION CONTROL	AML 23-10-11	
CONCRETE HEADWALL- 18"-24" MULTIPE BARREL	AML 23-20-1	
CONCRETE HEADWALL- 30" - 48" DOUBLE BARREL	AML 23-20-2	
CONCRETE HEADWALL- 30" - 48" TRIPLE BARREL	AML 23-20-3	
CONCRETE HEADWALL- MULTIPLE PIPE DIMENSIONS	AML 23-20-4	
CONCRETE HEADWALL- MULTIPLE PIPE REINFORCEMENT	AML 23-20-5	
GABION HEADWALL	AML 23-30-1	
CMP JOINTS	AML 23-40-1	
INTERMEDIATE AND END CULVERT ANCHOR	AML 23-40-2	
SLOTTED PIPE BEDDING	AML 23-50-1	
PIPE BEDDING- NON-TRENCHING CONDITIONS	AML 23-50-2	
PIPE BEDDING- TRENCHING CONDITIONS	AML 23-50-3	
PIPES COVER DEPTHS CHART KEY & NOTES	AML 23-50-4	
CIRCULAR PIPE COVER DEPTHS	AML 23-50-5	
NON-CIRCULAR PIPE COVER DEPTHS & EQUIVALENT CIRCULAR PIPE DIAMETERS	AML 23-50-6	
CULVERT DEBRIS BARRIER	AML 23-60-1	2-2013
IN-STREAM CULVERT DEBRIS BARRIER	AML 23-60-2	2-2013

SECTION 24- DROP STRUCTURES, MANHOLES, LOCKS

FINAL NAME	2013 No.	Updated
DROP BOX - INLET TYPE 1	AML 24-10-1	
DROP BOX - INLET TYPE 2	AML 24-10-2	
DROP BOX - INLET TYPE 3	AML 24-10-3	
DROP BOX - GRATES FOR INLET TYPE 2 & 3	AML 24-10-4	
JUNCTION BOX - FRAME AND ACCESSIBLE LID	AML 24-20-1	
JUNCTION BOX- CONCRETE TOP	AML 24-20-2	
JUNCTION BOX DIMENSIONS	AML 24-20-3	
SPRING BOX- INLET TYPE A	AML 24-30-1	
SPRING BOX- INLET TYPE B	AML 24-30-2	
MANHOLE TYPE A	AML 24-40-1	
MANHOLE TYPE A- STEP DETAILS	AML 24-40-2	
SECURITY DEVISES FOR FRAMES, GRATES, & LIDS	AML 24-50-1	

SECTION 30- RETAINING WALL STRUCTURES

FINAL NAME	2013 No.	Updated
WELDED-WIRE REINFORCED SOIL WALL	AML 30-10-1	
WELDED-WIRE REINFORCED SOIL WALL- FORM FACING UNITS	AML 30-10-2	
NON-REINFORCED BLOCK WALL- TYPE I	AML 30-20-1	10-2013
NON-REINFORCED BLOCK WALL- TYPE II (WALL HEIGHTS UP TO 9.0')	AML 30-20-2	Replaced
NON-REINFORCED BLOCK WALL- TYPE II (WALL HEIGHTS 9' TO 12.0')	AML 30-20-3	Replaced
NON-REINFORCED BLOCK WALL- TYPE II	AML 30-20-2	10-2013
NON-REINFORCED BLOCK WALL- TYPE II NOTES	AML 30-20-3	Replaced
NON-REINFORCED BLOCK WALL- TYPE II 90° OUTSIDE CORNER	AML 30-20-3	NEW 10-2013
STEEL PILE FOUNDATION	AML 30-30-1	9-2013
STEEL PILES REINFORCED CONRETE CAP	AML 30-30-2	9-2013
GABION RETAINING WALLS	AML 30-40-1	4-2013
CONCRETE GRAVITY WALL	AML 30-50-1	10-2013
CONCRETE GRAVITY WALL- NOTES & QUANTITIES	AML 30-50-2	9-2013
REINFORCED CONCRETE WALL (HEIGHTS FROM 5' TO 20')	AML 30-60-1	10-2013
REINFORCED CONCRETE WALL - CONSTRUCTION NOTES & QUANTITIES	AML 30-60-2	10-2013
REINFORCED CONCRETE WALL - JOINTS & WEEP HOLES	AML 30-60-3	
REINFORCED CONCRETE WALL - STEP FOOTER	AML 30-60-4	
REINFORCED CONCRETE WALL - BENDS	AML 30-60-5	
REINFORCED CONCRETE WALL & GRATED TRENCH DRAIN	AML 30-60-6	
PILE & LAGGING WALL- SHEET 1	AML 30-70-1	4-2013
PILE & LAGGING WALL- SHEET 2	AML 30-70-2	4-2013
STEEL PILE- SPLICING DETAILS	AML 30-70-3	
REINFORCED CONCRETE PILES & CAP	AML 30-80-1	2-2013
SOIL REINFORCING TUBES- SHEET 1	AML 30-90-1	
SOIL REINFORCING TUBES- SHEET 2	AML 30-90-2	

SECTION 40- PORTAL CLOSURES & HIGHWALLS

FINAL NAME	2013 No.	Updated
CONCRETE MINE SHAFT MONUMENT	AML 40-10-1	
SUBSIDENCE AND MINE BACKFILL	AML 40-10-2	
MOUNTAIN BREAK BACKFILL	AML 40-10-3	
STANDARD NON-WILDLIFE ACCESIBLE CLOSURE	AML 40-20-1	
STANDARD WILDLIFE ACCESSIBLE CLOSURE	AML 40-20-2	
STANDARD CLOSURES W/ POLYURETHANE FOAM	AML 40-20-3	
PORTAL CLOSURE W/ GABION RETAINING WALL	AML 40-20-4	
CLOSURE WITH EXTERIOR BARS IN CONCRETE BLOCK	AML 40-20-5	
CLOSURE WTH EXTERIOR BARS SET IN CONCRETE	AML 40-20-6	
CLOSURE EXTERIOR BARS DETAILS	AML 40-20-7	
CONCRETE BLOCK CLOSURE	AML 40-20-8	
CONCRETE BLOCK CLOSURE W/ HUMAN ACCESS	AML 40-20-9	
AUGAR CLOSURE W/ CLASS II BACKFILL	AML 40-20-10	
CLOSURE GENERAL NOTES	AML 40-20-11	
HIGHWALL RESTORATION	AML 40-30-1	
HIGHWALL RESTORATION FOR DANGEROUS OVERHANGS	AML 40-30-2	

SECTION 50- ACCESS REPAIR & SAFETY

FINAL NAME	2013 No.	Updated
STABILIZED CONSTRUCTION ENTRANCE	AML 50-10-1	
CURB BARRIERS	AML 50-10-2	
BITUMINOUS PAVEMENT RESTORATION	AML 50-10-3	
BITUMINOUS PAVEMENT RESTORATION W/ PIPE	AML50-10-4	
ACCESS GATE - 16' STEEL TUBE	AML 50-10-5	
INTERLOCKING CELLULAR BLOCK CHANNEL CROSSING	AML 50-10-6	7-2013
TEMPORARY LOW WATER CROSSING	AML 50-10-7	7-2013
TEMPORARY BRIDGE OR PAVEMENT CROSSING	AML 50-10-8	
MOUNTABLE BERM	AML 50-10-9	
DEBRIS BARRIER WALL- BALE & PLYWOOD	AML 50-20-1	
DEBRIS BARRIER WALL- PERMANENT	AML 50-20-2	
GUARDRAIL PANEL WALL- RAIL STEEL	AML 50-20-3	4-2013
GUARDRAIL PANEL WALL- PIPE SUPPORT	AML 50-20-4	
CHAIN-LINK FENCE	AML 50-20-5	
WOVEN-WIRE FENCE	AML 50-20-6	
CONCRETE JERSEY BARRIER	AML50-20-7	
STEEL BEAM GUARDRAIL	AML 50-20-8A	
GUARDRAIL COMPONENTS	AML 50-20-8B	
GUARDRAIL POST- STEEL	AML 50-20-8C	
GUARDRAIL POST- TIMBER	AML 50-20-8D	
GUARDRAIL TERMINAL SECTION	AML 50-20-9	NEW 10-2013

SECTION 60- STREAM RESTORATION

FINAL NAME	2013 No.	Updated
PIPE DIVERSION	AML 60-10-1	
SANDBAG/STONE DIVERSION	AML 60-10-2	
FABRIC-BASED CHANNEL DIVERSION	AML 60-10-3	
ECB BANK PROTECTION	AML 60-20-1	
BRUSH MATTRESS BANK TREATMENT	AML 60-20-2	
FASCINE BANK TREATMENT	AML 60-20-3	
DORMANT POST PLANTINGS	AML 60-20-4	
DORMANT POST PLANTINGS- WILLOW POST	AML 60-20-5	
BANK SHAPING	AML 60-20-6	
REINFORCED EARTH BANK TREATMENT	AML 60-20-7	
REINFORCED EARTH BANK INSTRUCTIONS	AML 60-20-8	
3-STAGE CHANNEL	AML 60-30-1	
STEP POOL- PART A	AML 60-30-2	
STEP POOL- PART B	AML 60-30-3	
LOG VANE	AML 60-40-1	
ROCK VANE	AML 60-40-2	
J-HOOK VANE	AML 60-40-3	
STREAM DEFLECTOR	AML 60-40-4	
STREAM DEFLECTOR- ALTERNATIVE CONFIGURATIONS	AML 60-40-5	
CROSS VANE	AML 60-40-6	
"W" WEIR	AML 60-40-7	

SECTION 70- MISCELLANEOUS

FINAL NAME	2013 No.	Updated
SLOPE OR ENBANKMENT FOUNDATION BENCHES	AML 70-10-1	
SLOPE RECONSTRUCTION	AML 70-10-2	
BENCHES	AML 70-10-3	
COVER MATERIAL PLACEMENT	AML 70-10-4	
ECB SLOPE INSTALLATION	AML 70-10-5	
GATE VALVE AND HOUSING	AML 70-20-1	
FLUME- TIMBER	AML 70-20-2	
SPREADER BAR BAFFLE	AML 70-20-3	
GABION BASKET ASSEMBLY	AML 70-30-1	

ROCK ANCHORS SHALL BE PLACED AT ALL TRANSVERSE SEAMS AND MAX 100' INTERVALS.

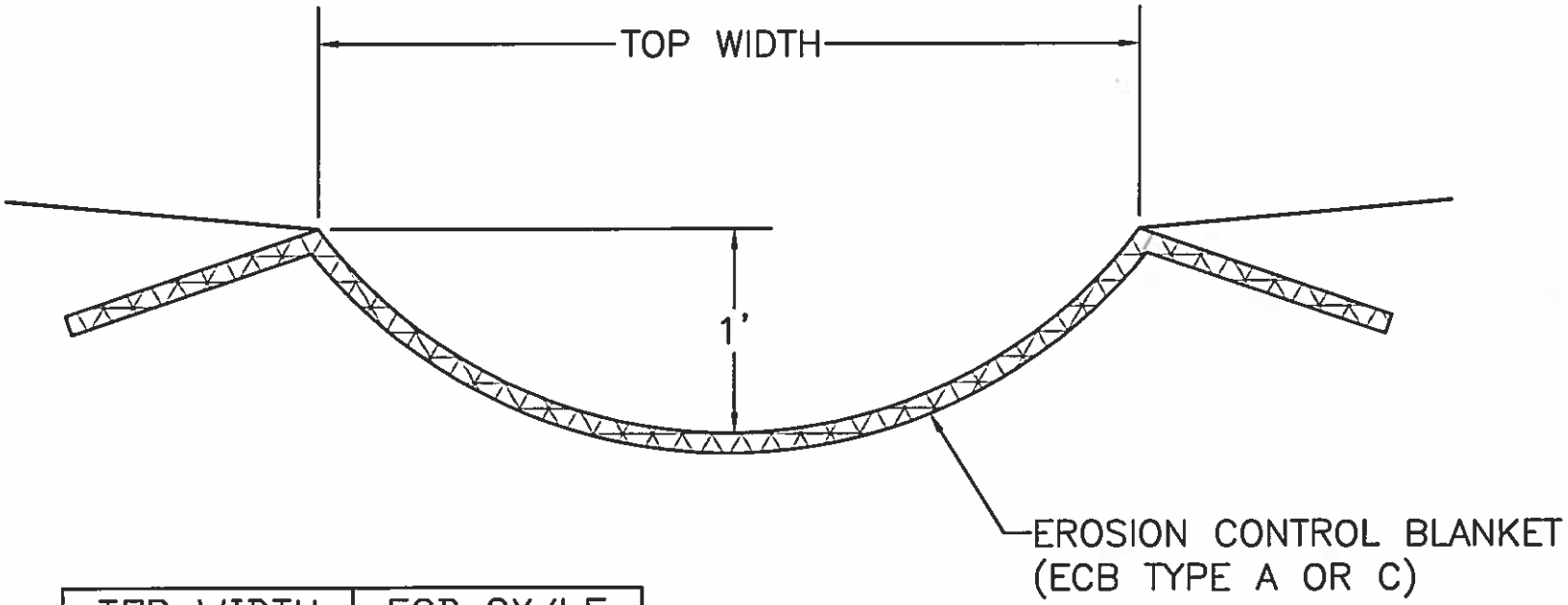

TOP WIDTH	ECB SY/LF
4'	1
10'	1.25
20'	1.5

EKY DITCHES USE TYPE A OR C
WKY DITCHES USE ONLY TYPE C

USE WITH AML 21-10-5, 21-70-1

ECB DITCH- SWALE (AML 21-10-3)

KY DAML 12-2013

NOTE: SOIL AMENDMENTS AND SEED SHALL BE APPLIED BEFORE INSTALLING EROSION CONTROL BLANKETS.

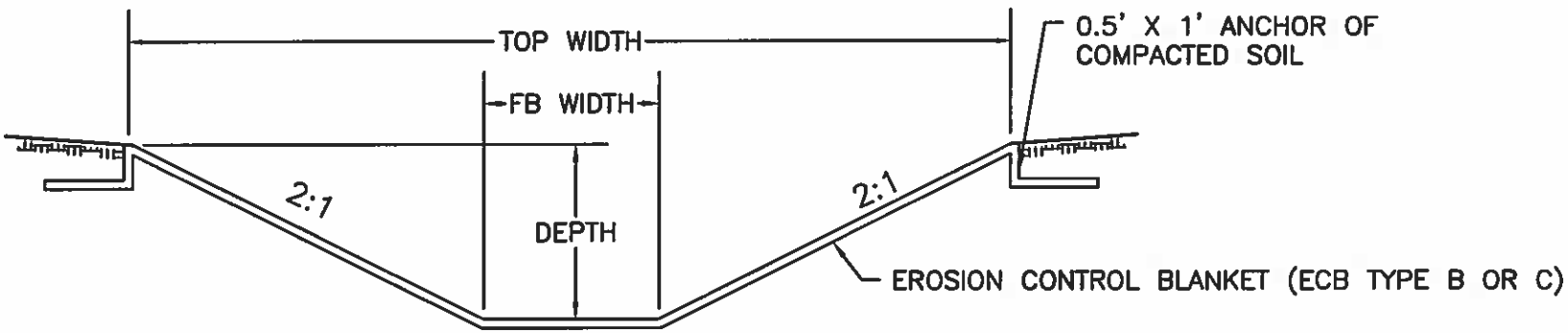

EKY DITCHES USE TYPE B OR C
WKY DITCHES USE ONLY TYPE C

FB WIDTH	DEPTH	TOP WIDTH	ECB (SQ.YD/LF)
2'	1'	6'	0.85
2'	2'	10'	1.3
4'	2'	8'	1.5

USE WITH AML 21–10–5, 21–70–2

ECB DITCH- FLAT BOTTOM (AML 21-10-4)

KY DAML 12-2013

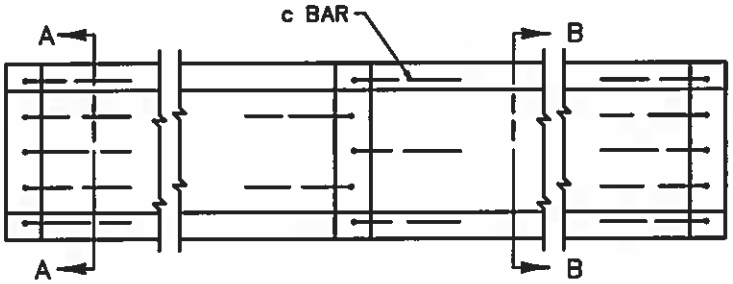

PLAN VIEW

NOTES:

1. ESTIMATE 0.032 CYD CLASS "A" CONCRETE PER LF OF DITCH AND 0.060 CYD CLASS "A" CONCRETE PER ANCHOR BASED ON MINIMUM DIMENSIONS SHOWN. ALL CONCRETE HAS FIBER REINFORCEMENT.
2. IF THE CONTRACTOR ELECTS TO USE A CONSTRUCTION JOINT IN THE POURING OF THE PAVED DITCH, IT SHALL BE CONSTRUCTED AS SHOWN.
3. ANY LENGTH OF LONGITUDINAL REINFORCEMENT STEEL WILL BE PERMITTED PROVIDED A 1'-0" LAP IS USED IN THE SPLICE. ADEQUATE TIES AT THE SPLICE SHALL BE REQUIRED.

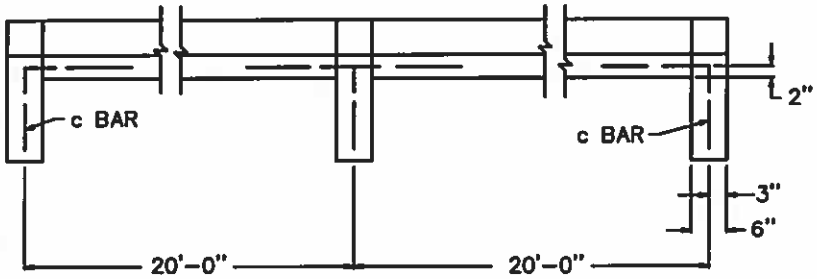

ELEVATION VIEW

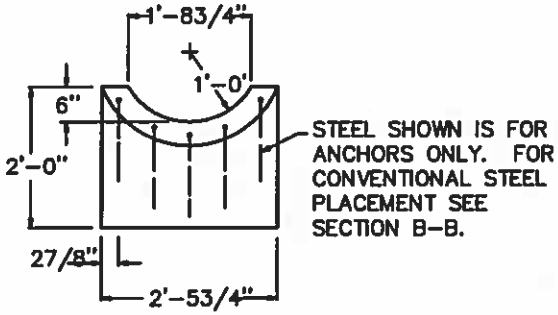

SECTION A-A

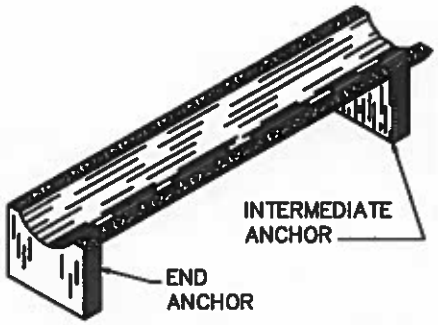

ISOMETRIC VIEW

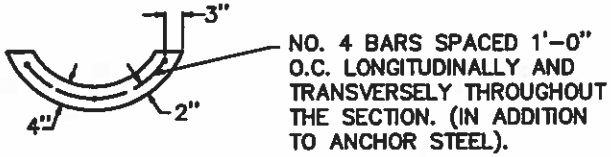

SECTION B-B

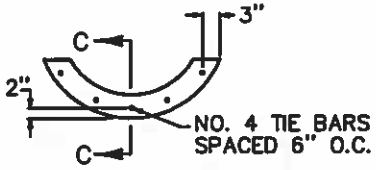

TIE BAR SECTIONAL VIEW

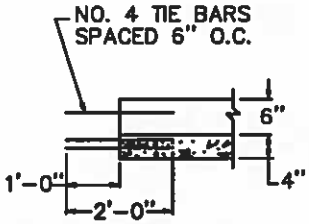

SECTION C-C

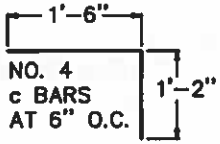

c BAR DETAIL

APPROXIMATE STEEL QUANTITIES FOR MINIMUM SECTION SHOWN			
END ANCHORS (EACH)	8.90 LBS.	CONSTRUCTION JOINTS (EACH)	6.68 LBS.
INTERMEDIATE ANCHORS (EACH)	8.90 LBS.	BARS PER SQ. YD. OF DITCH	12.47 LBS.

CONCRETE DITCH- SWALE (AML 21-50-1)

KYDAML 10-2013

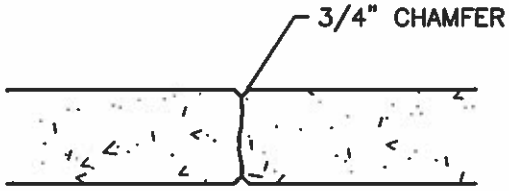

CONSTRUCTION JOINT

SEE AML 30-60-3 FOR ADDITIONAL DETAILS

CONSTRUCTION JOINTS SHALL BE PLACED A MINIMUM OF 10' & A MAXIMUM OF 20'. SEE "STEEL" SECTION OF AML TECHNICAL SPECIFICATION FOR BAR SPLICES & EMBEDMENT INFORMATION.

ALL STEEL REINFORCEMENT SHALL BE 60 KSI. ALL CONCRETE IS 4,000 PSI WITH FIBER REINFORCEMENT. SECURITY ANCHORS ARE INCIDENTAL. DON'T WELD GRATES CLOSED.

VEHICLE GRATE IS EQUIVALENT OF HOE OF KY TYPE A W/ EMBEDDED FRAME RAIL.

NON-VEHICULAR GRATE IS 1" X 3/16" BEARING BAR SIZE PLAIN BLACK PAINTED, WELDED STEEL BAR GRATING.

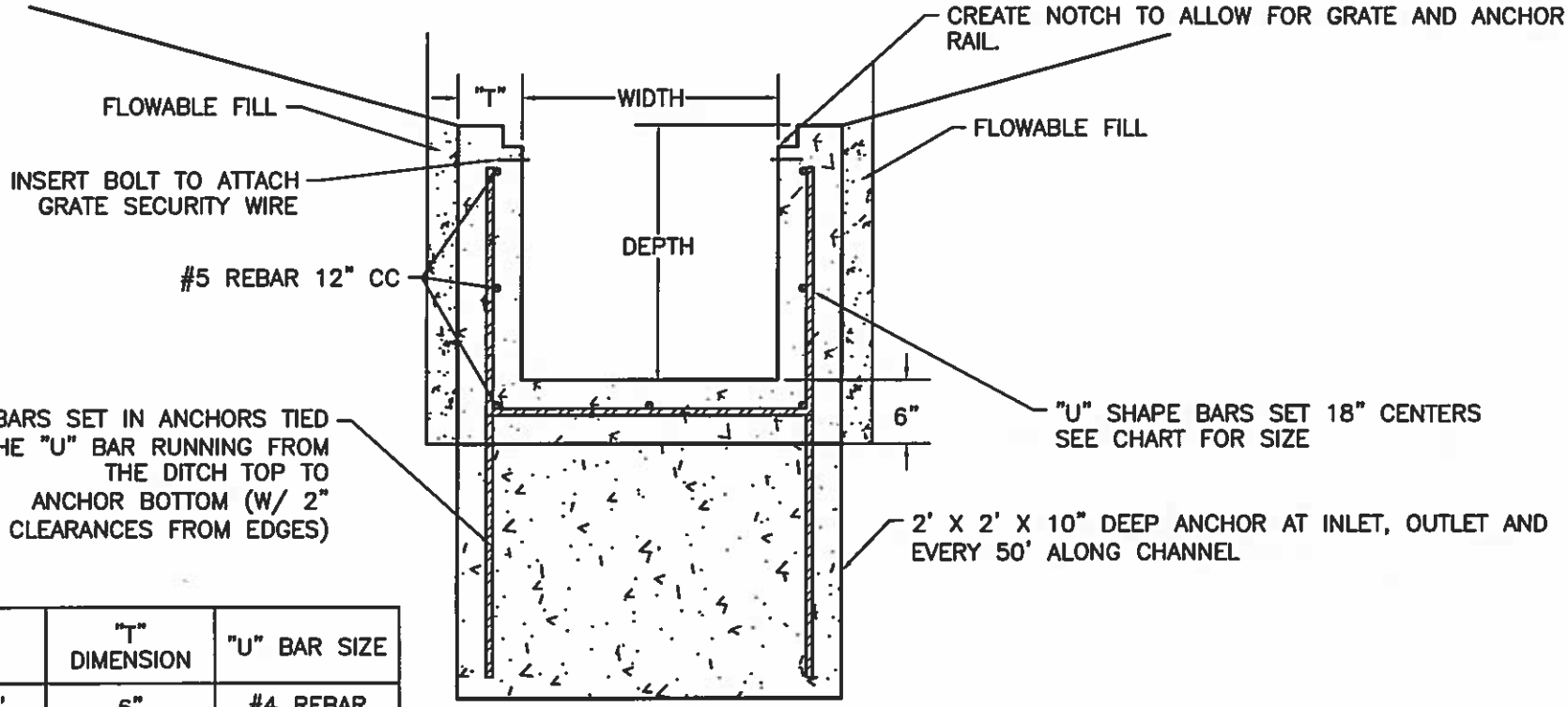

DEPTH	"T" DIMENSION	"U" BAR SIZE
0' – 3'	6"	#4 REBAR
3.1' – 6'	10"	#5 REBAR

ALL REBAR SHALL HAVE 2" MIN CLEARANCE. INSTALL SIDEWALLS COMPLETELY BELOW GROUNDLINE. UNITS MAY BE PRE-CAST WITH ENGINEER'S PRIOR APPROVAL.

FOR GRATES USE WITH AML 24-50-1

CONCRETE DITCH- RECTANGULAR (AML 21-50-3)

NOTES:

1. SPACING OF ANCHORS SHALL BE AT ALL TRANSVERSE SEAMS AND 100' MAX INTERVALS.
2. TWO HAYBALES SHALL BE PLACED ON EACH SIDE AT ALL ANCHOR LOCATIONS
3. SOIL AMENDMENTS AND SEED SHALL BE APPLIED BEFORE INSTALLING EROSION CONTROL BLANKETS.

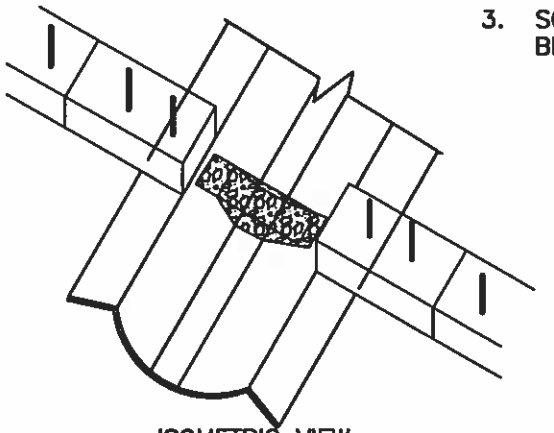

ISOMETRIC VIEW
NTS

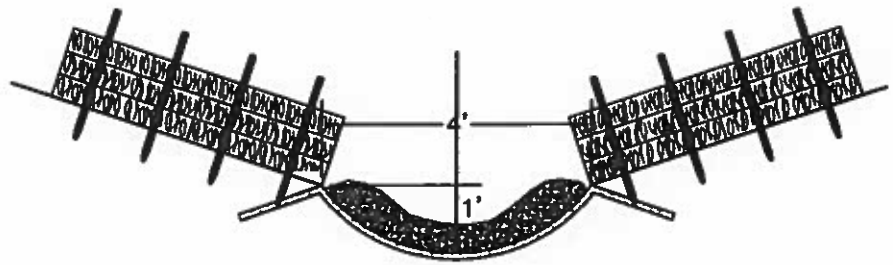

SECTION A–A
NTS

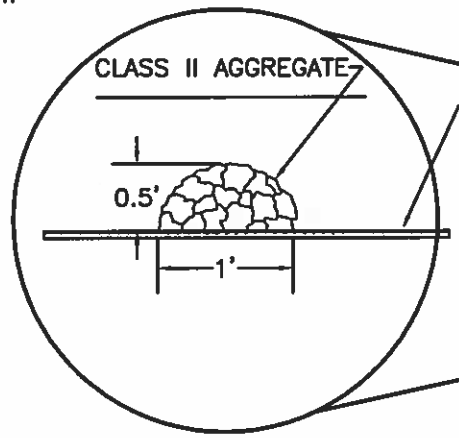

DETAIL A
NTS

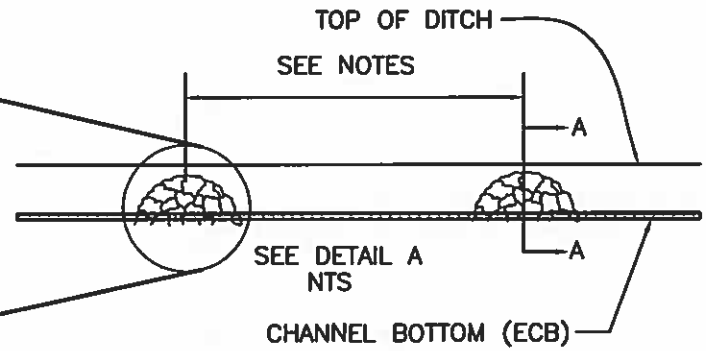

PROFILE VIEW
NTS

USE WITH AML 21–10–3

ECB ANCHOR- SWALE DITCH SEAMS (AML 21-70-1)

KY DAML 9–2013

NOTES:

1. SPACING OF ANCHORS SHALL BE AT ALL TRANSVERSE SEAMS AND 100' MAX INTERVALS UNLESS STATED OTHERWISE ON THE DESIGN PLANS OR SPECIAL CONDITIONS.

2. SOIL AMENDMENTS AND SEED SHALL BE APPLIED BEFORE INSTALLING EROSION CONTROL BLANKETS.

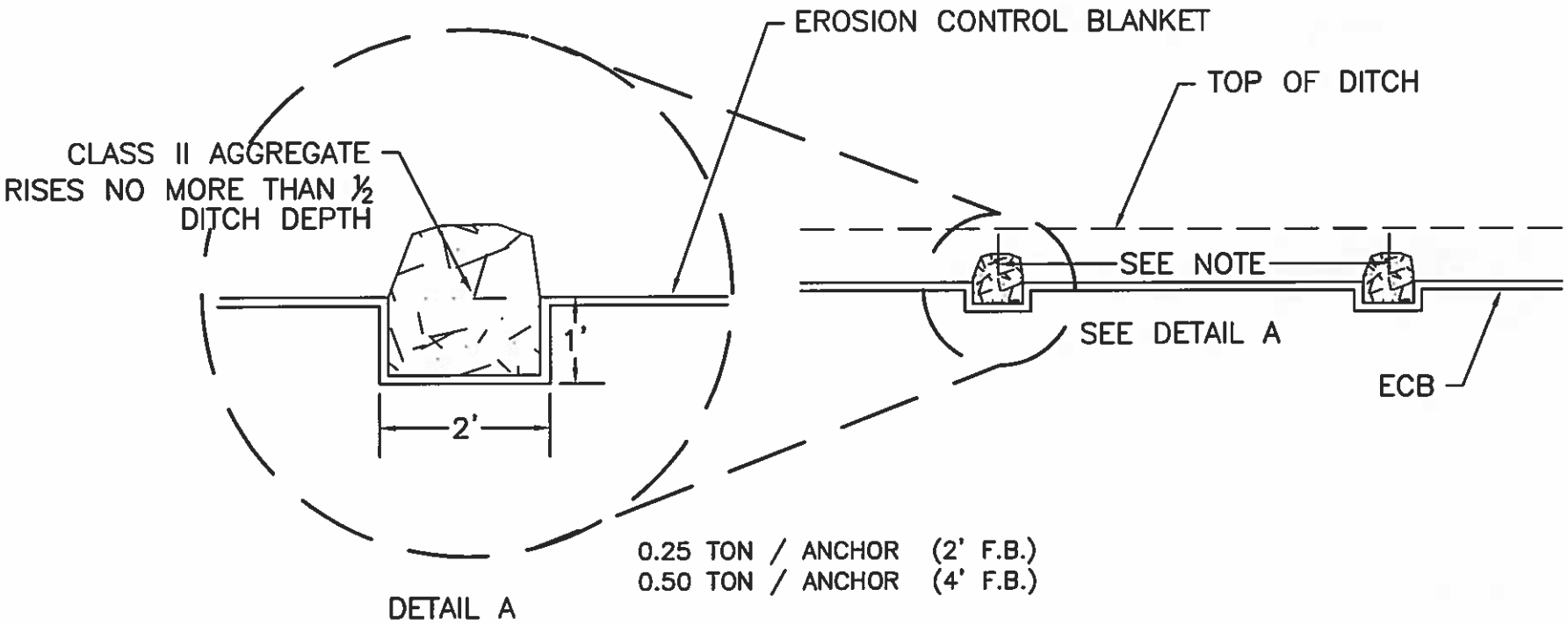

USE WITH AML 21-10-4

ECB ANCHOR- FB DITCH SEAMS (AML 21-70-2)

KY DAML 9-2013

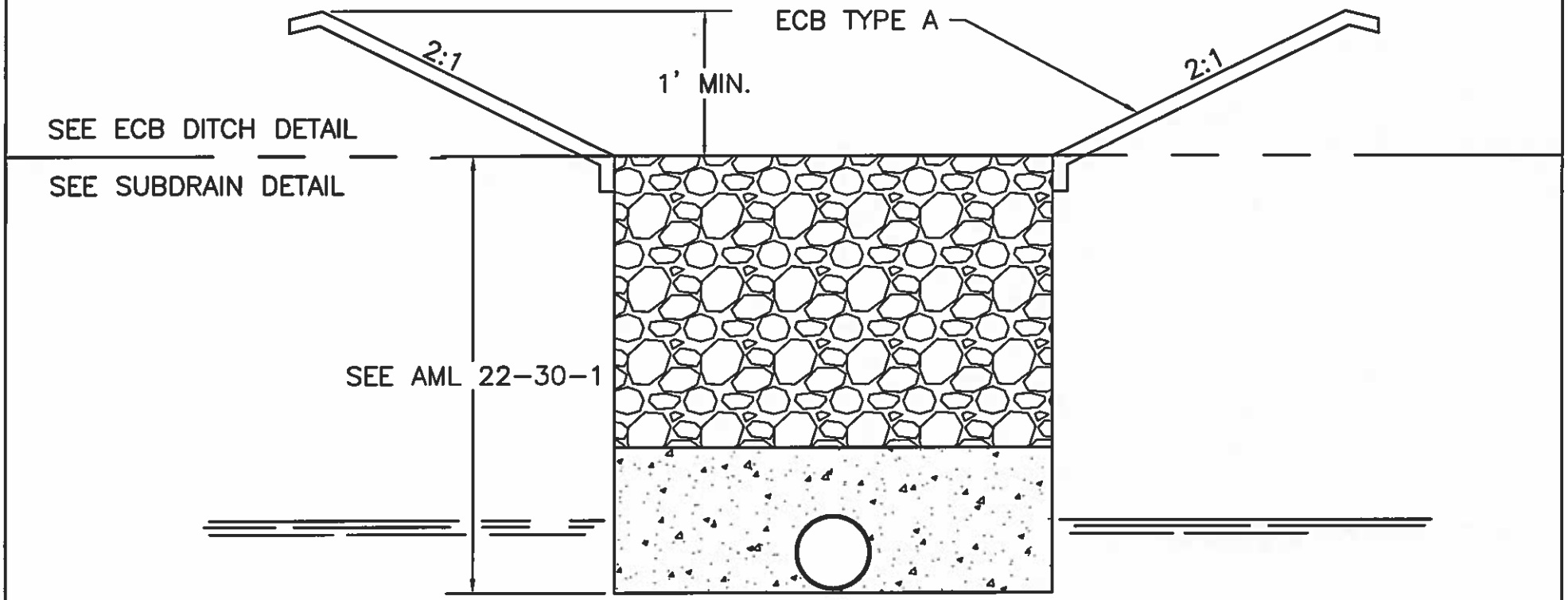

SEE THE DITCH AND SUBDRAIN DETAILS FOR SPECIFIC INFORMATION. SEPARATE BID ITEMS.

COMBINATION ECB DITCH-DRAIN (AML 22-30-3)

KY DAML 4-2013

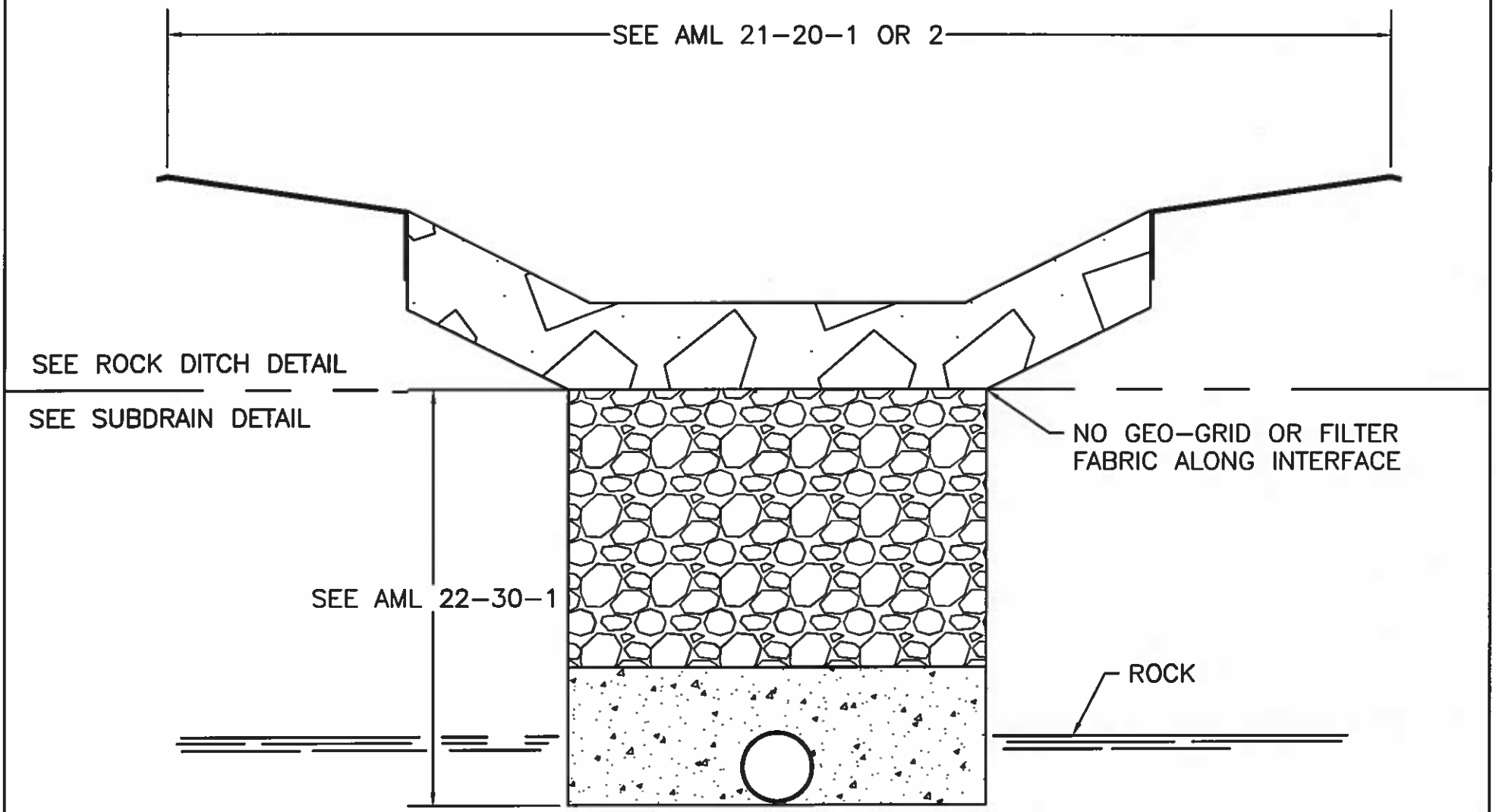

SEE THE DITCH OR SUBDRAIN DETAIL FOR SPECIFIC INFORMATION. SEPARATE BID ITEMS.

COMBINATION ROCK DITCH-DRAIN (AML 22-30-4)

KY DAML 9-2013

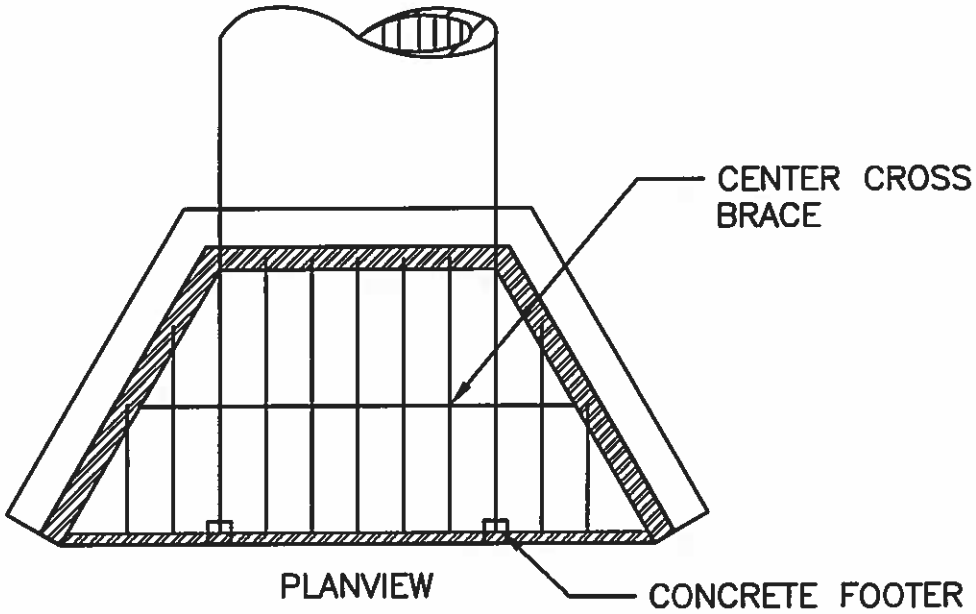

1. DEBRIS RAILS SHOULD BE 1.25" RECTANGULAR STEEL SECTIONS SET ON 6" CENTERS.
2. SET CENTER CROSS BRACE AT ELEVATION AT LEAST ½ PIPE DIA. ABOVE CULVERT INVERT.
3. USE CROSS BARS ONLY ON PIPES >36" UNLESS STATED OTHERWISE ON THE DRAWINGS OR IN THE SPECIAL CONDITIONS OR WHEN DIRECTED BY ENGINEER IN WRITING.

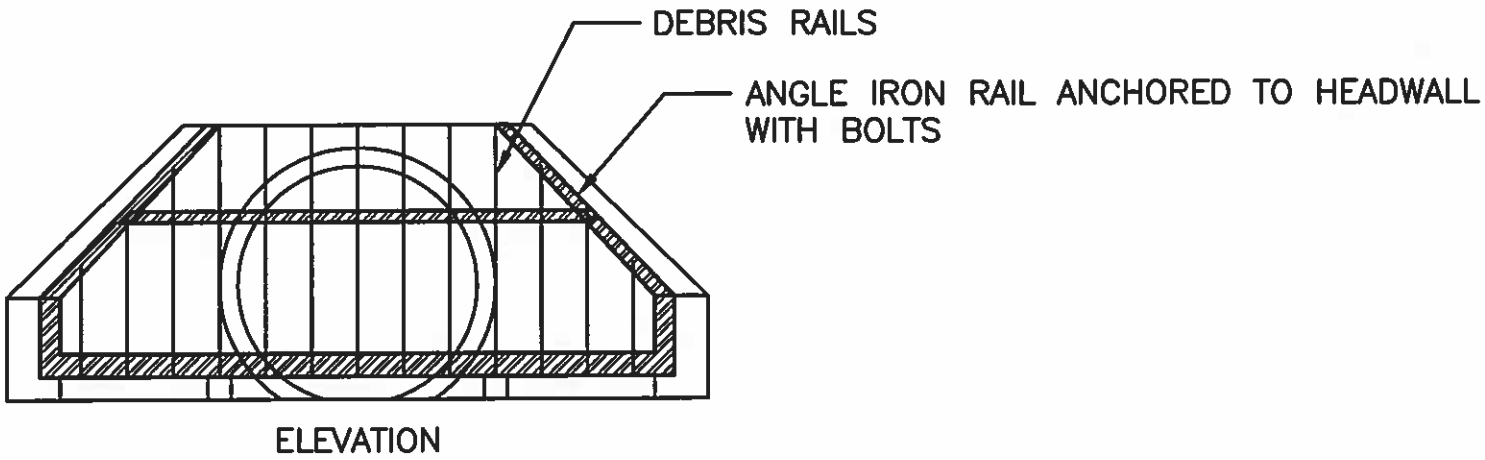

CULVERT DEBRIS BARRIER (AML 23-60-1)

KYDAML 2/2013

"BW" SPACING AND "H" ARE SPECIFIED ON DRAWINGS OR SPECIAL CONDITIONS.

BARRIER SCREEN MATERIALS WILL BE SPECIFIED ON THE DRAWINGS. IF NOT STATED ASSUME #8 REBAR. ALL JOINTS ARE WELDED.

THESE DEVISES SHOULD BE SET UPSTREAM OF THE CULVERT A MINIMUM DISTANCE OF 1.5 TIMES THE PIPE DIAMETER.

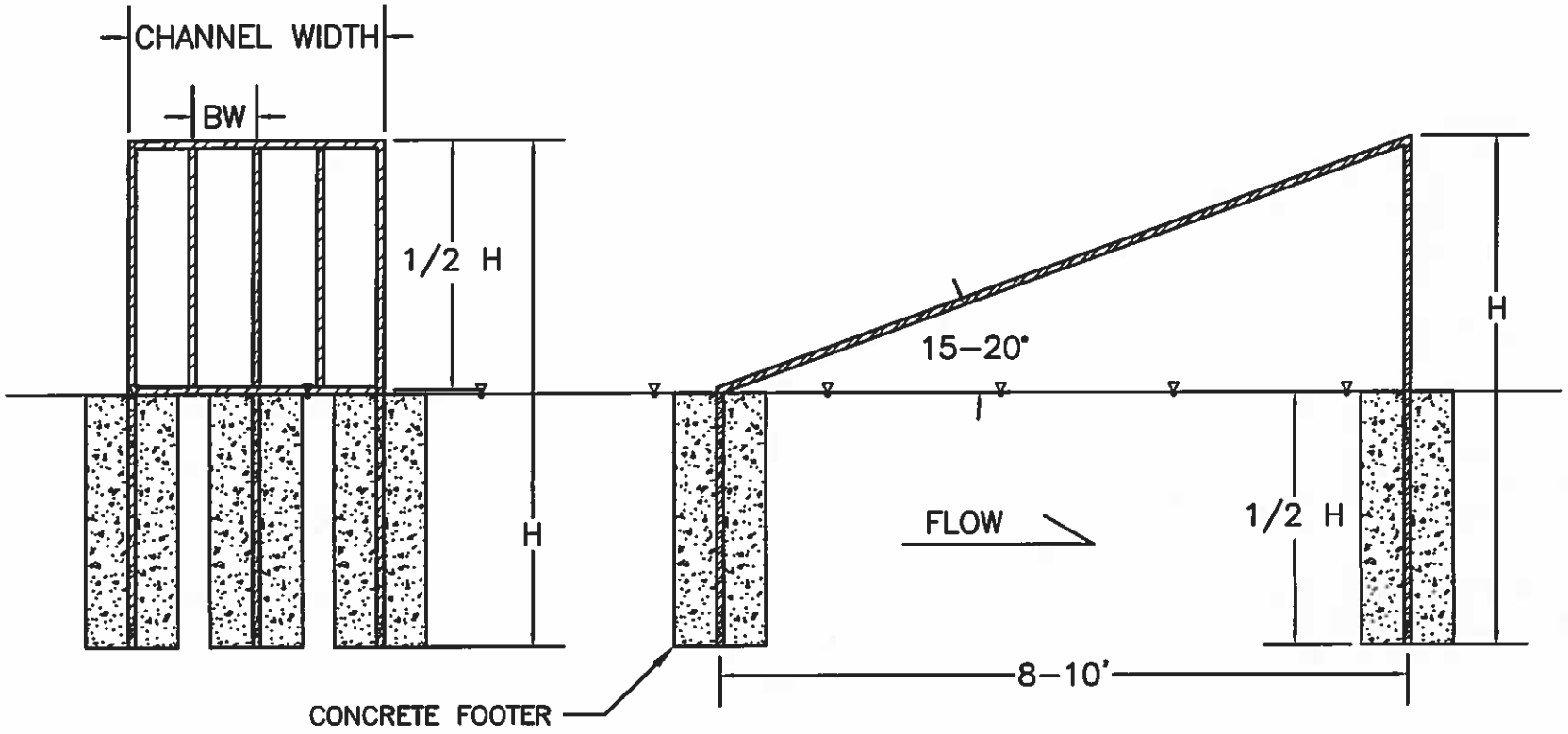

IN-STREAM CULVERT DEBRIS BARRIER (AML 23-60-2)

KYDAML 2/2013

1. REMOVE LOOSE MATERIAL FROM HIGHWALL PRIOR TO WALL CONSTRUCTION.
2. CONSTRUCT BASE ON A CONCRETE FOOTER UNLESS DIRECTED OTHERWISE BY ENGINEER.
3. SEE DESIGN DRAWINGS IF CHAIN-LINK FENCE (NOT SHOWN) IS REQUIRED.
4. IF DESIGN HEIGHT IS TO EXCEED 8' THEN WALL MUST BE SPECIALLY DESIGNED.

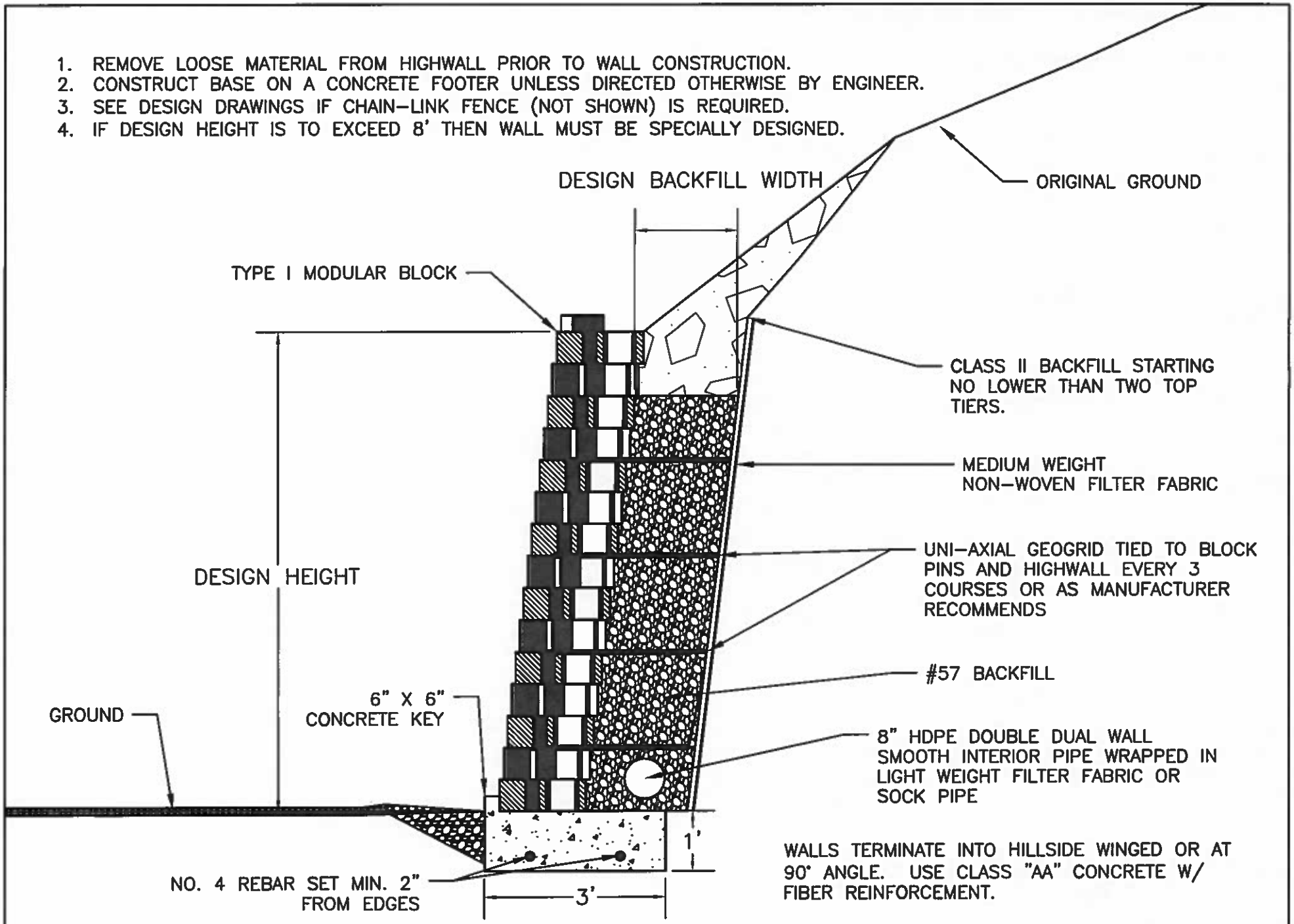

NON-REINFORCED BLOCK WALL- TYPE I (AML 30-20-1)

KY DAML 10-2013

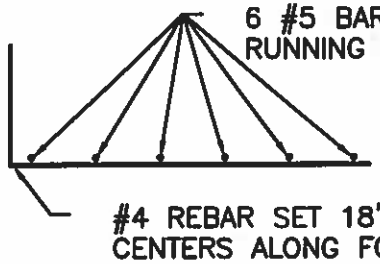

FOOTER REINFORCEMENT DETAIL
NTS

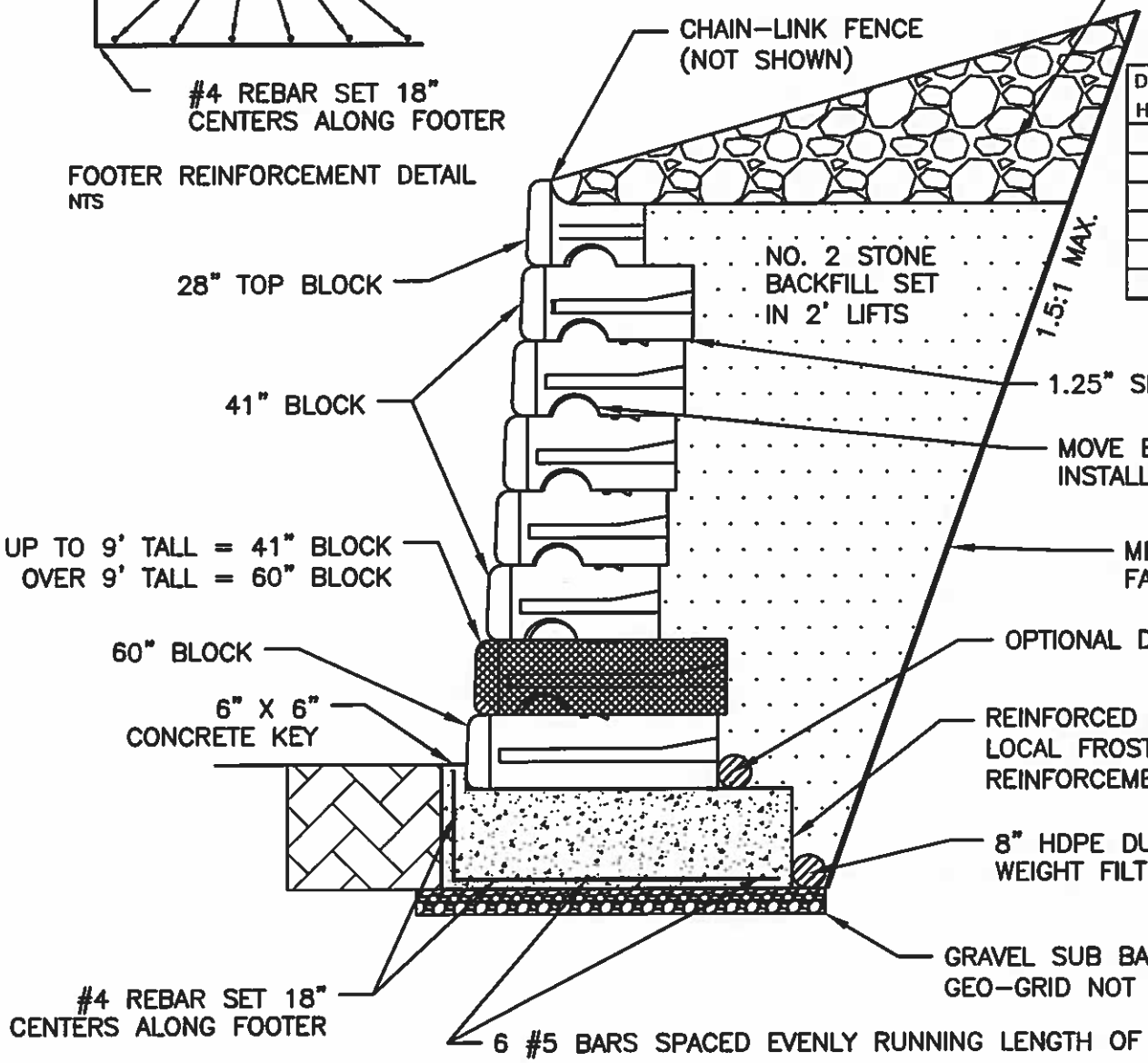

CLASS II BACKFILL ABOVE WALL (IF REQUIRED) 1.5:1 MAX SLOPE

WALLS TERMINATE INTO HILLSIDE WINGED OR AT 90° ANGLE.

Design	FF	No. 2	Class II	Row							
Height	SY/LF	Ton/LF	Ton/LF	1	2	3	4	5	6	7	8
4.5	0.8	1.2	0.8	60"	41"	28"					
6	1.0	1.7	0.9	60"	41"	41"	28"				
7.5	1.2	2.2	0.9	60"	41"	41"	41"	28"			
9	1.3	2.7	1.0	60"	41"	41"	41"	41"	28"		
10.5	1.4	3.3	1.1	60"	60"	41"	41"	41"	41"	28"	
12	1.7	3.2	1.1	60"	60"	41"	41"	41"	41"	41"	28"

1.25" SETBACK (TYP.)

MOVE BLOCKS FORWARD DURING INSTALLATION TO ENGAGE SHEAR KNOBS

MEDIUM WEIGHT NON-WOVEN FILTER FABRIC IF SOIL CONTACT

OPTIONAL DRAIN PLACEMENT

REINFORCED CONCRETE LEVELING PAD SET BELOW LOCAL FROST LINE, CLASS "AA" CONCRETE W/ FIBER REINFORCEMENT (7' X 2' X LENGTH WALL)

8" HDPE DUAL WALL WRAPPED IN LIGHT WEIGHT FILTER FABRIC OR SOCK PIPE

GRAVEL SUB BASE (IF REQUIRED BY ENGINEER, BIAXIAL GEO-GRID NOT SHOWN)

USE WITH AML 30-20-3

NON-REINFORCED BLOCK WALL- TYPE II (AML 30-20-2)

KY DAML 10-2013

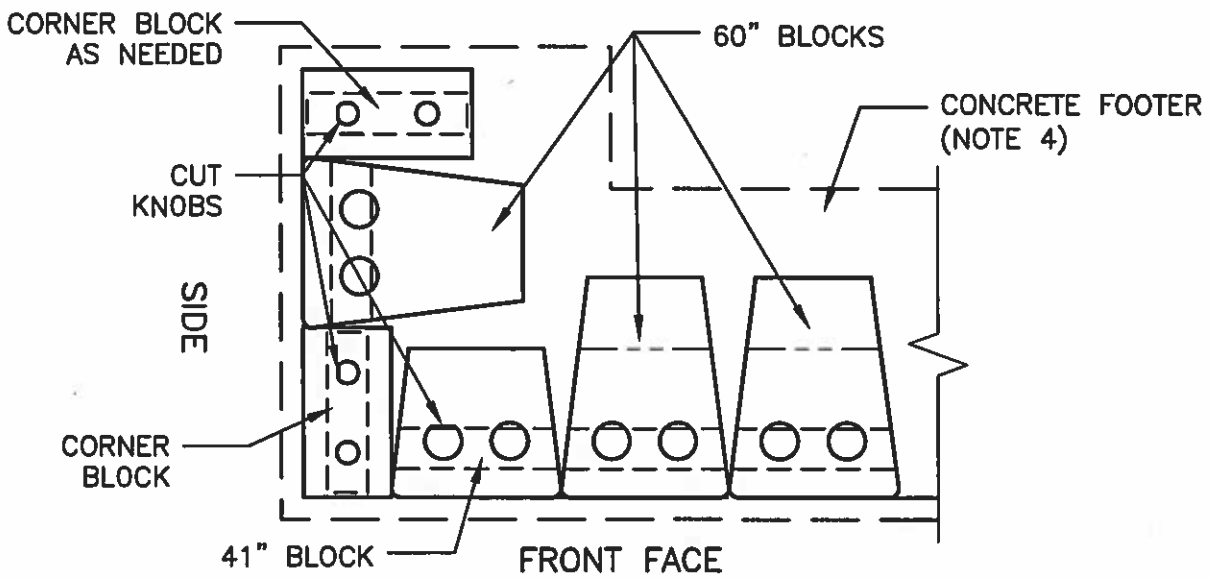

ODD NUMBER ROWS
(INCLUDES BASE)

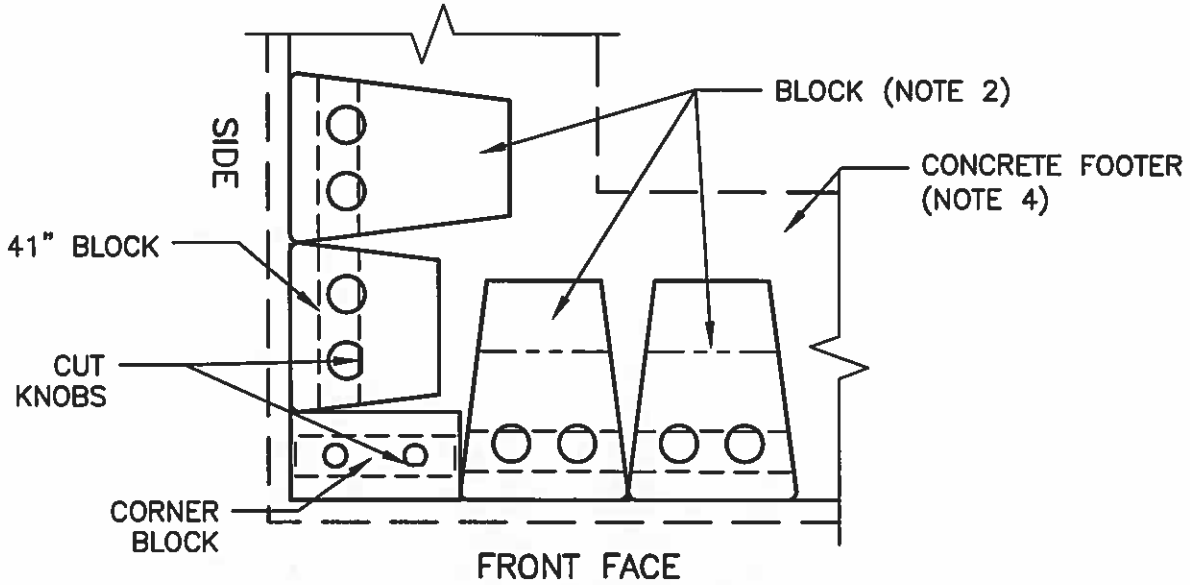

EVEN NUMBER ROWS

1. CORNER BLOCKS ARE 46" X 24" W/ 6" KNOBS. BASE COURSE HAS STRAIGHT BOTTOM.
2. SEE 30-20-2 FOR BLOCK SIZE PER ROW HEIGHT.
3. CUT EDGE OF 10" KNOBS ON 41" BLOCKS AND 6" KNOB ON CORNER BLOCK W/ CHOP SAW TO PROVIDE CLEARANCE FOR BLOCKS IN THE NEXT ROW.
4. LAP LONGITUDINAL BARS IN CONCRETE FOOTER AT CORNERS.

NON-REINFORCED BLOCK WALL- TYPE II 90° OUTSIDE CORNER (AML 30-20-3)

USE WITH AML 30-20-2

KYDAM, 10-2013

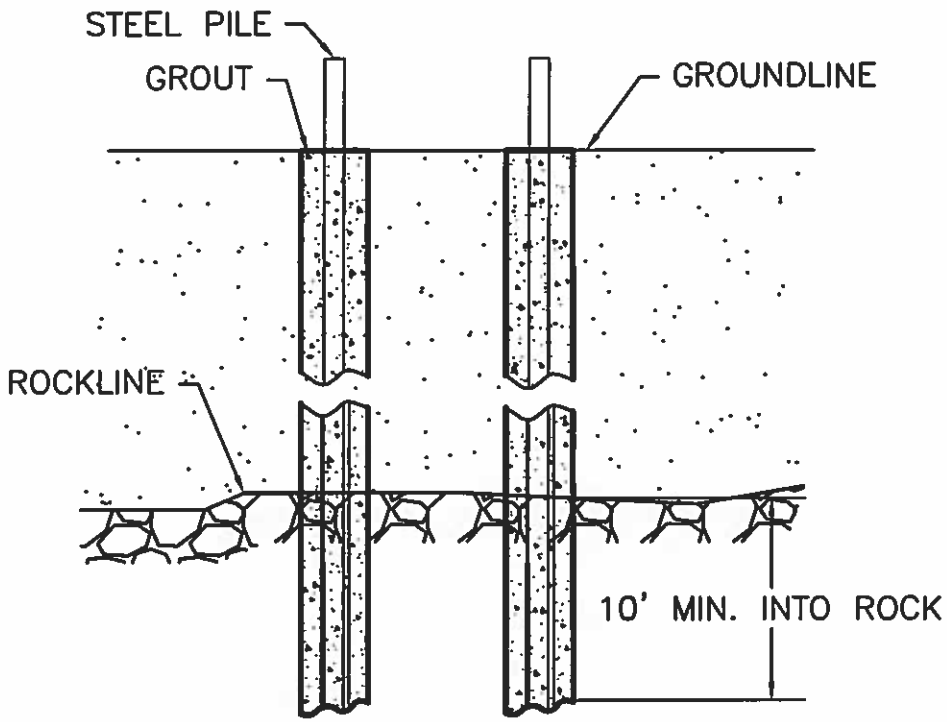

DESIGN CHART	
DEPTH OF ROCK	CTR-CTR SPACING OF RAILS AND NO. OF ROWS
5'-9'	USE 48" SPACING- 1 ROW
10'-14'	USE 36" SPACING- 1 ROW
15'-19'	USE 24"- 1 ROW OR USE 48"- 2 ROWS
20'-24'	USE 24"- 2 ROWS OR USE 36"- 3 ROWS
25'+	USE 24" SPACING- 3 ROWS

- IF SOIL DEPTH EXCEEDS 5 FEET, THEN A 2' THICK CONCRETE CAP SHOULD BE USED TO TIE THE STEEL PILES TOGETHER UNLESS DIRECTED OTHERWISE ON THE DRAWINGS OR BY THE ENGINEER IN WRITING.
- MINIMUM PILE SIZE IS W8 X 40
- ENGINEER MAY SUBSTITUE STEEL PILES FOR 130 LBS/YD RAIL STEEL (SEE NOTE 5).

NOTES:

1. IF DEPTHS TO ROCK EXCEED 20' THE ENGINEER MAY REQUIRE ADDITIONAL EXCAVATION.
2. BEAMS SHALL BE ORIENTED WITH FLANGES PERPENDICULAR TO POSSIBLE SLIDE MOVEMENT.
3. BEAMS SHALL BE ENCASED WITH GROUT FOR THE ENTIRE DEPTH OF THE HOLE.
4. BEAMS SHALL BE STRAIGHT AND STRUCTURALLY SOUND. ENGINEER MUST AUTHORIZE SPLICING. NO SPLICING SHALL BE ALLOWED IN RAILROAD RAILS.
5. THE ENGINEER MAY SPECIFY THE SIZE OR TYPE OF STEEL, INCLUDING USE OF RAILROAD STEEL RAILS, ON DRAWINGS, IN THE SPECIAL CONDITIONS, OR IN WRITING DURING CONSTRUCTION.

SEE AML 30–30–2 FOR CAP DETAILS

STEEL PILES FOUNDATION (AML 30-30-1)

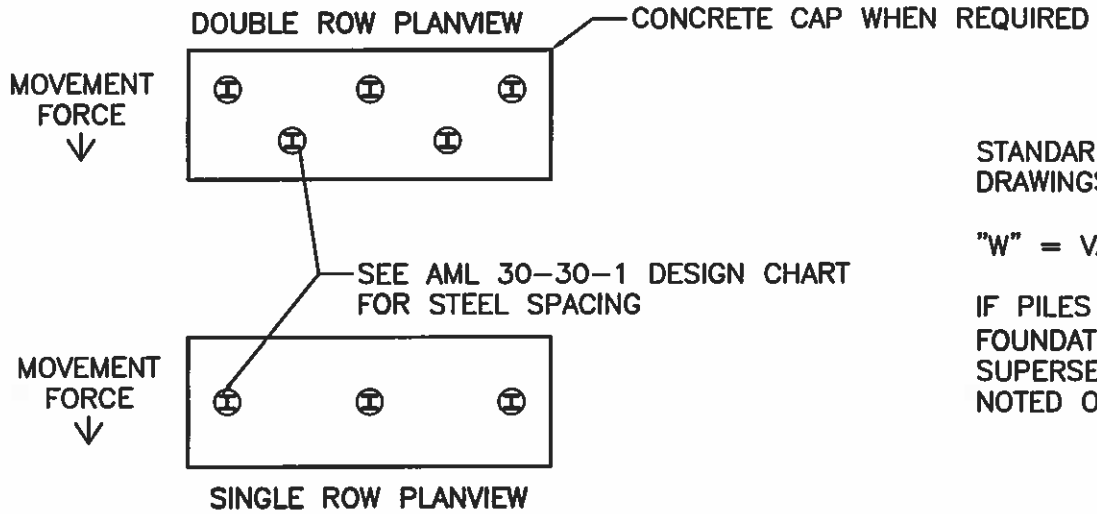

STANDARD "H"= 2 FEET UNLESS NOTED OTHERWISE ON DRAWINGS OR SPECIAL CONDITIONS.

"W" = VARIES BASED ON PILE SIZE + 12"

IF PILES ARE SET IN CONCRETE CAP USED AS A WALL FOUNDATION, THEN THIS DETAIL'S REINFORCEMENT PATTERN SUPERSEDES THE FOOTER DETAIL FOR THAT WALL UNLESS NOTED OTHERWISE ON THE DRAWINGS.

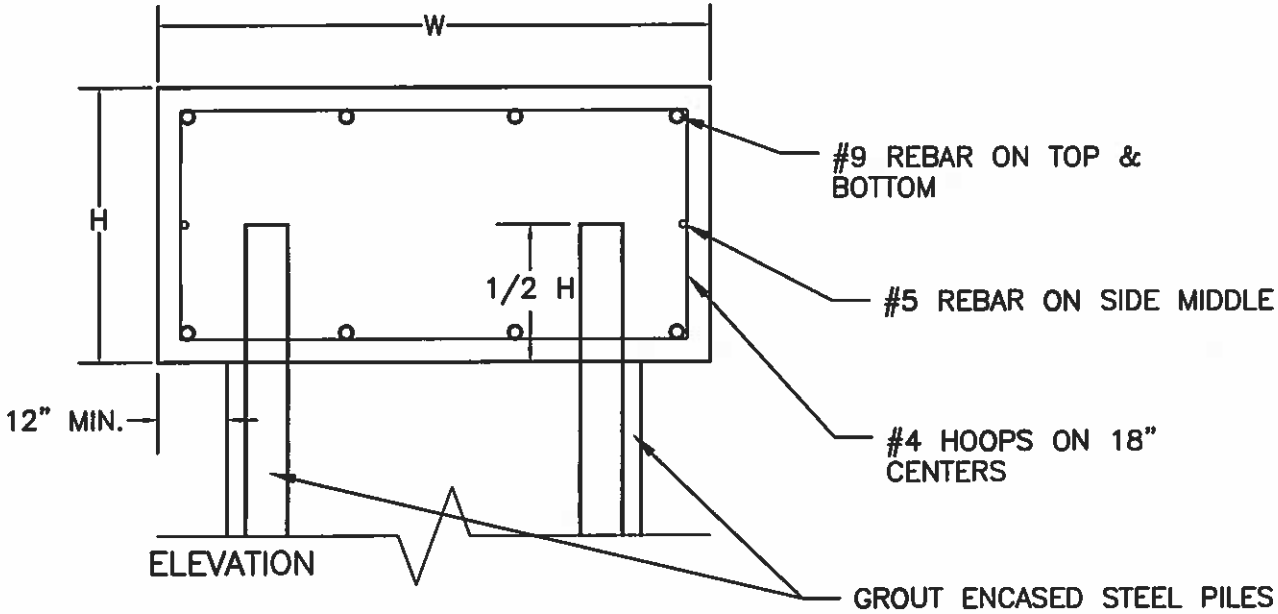

PILES SET IN CONCRETE CAP

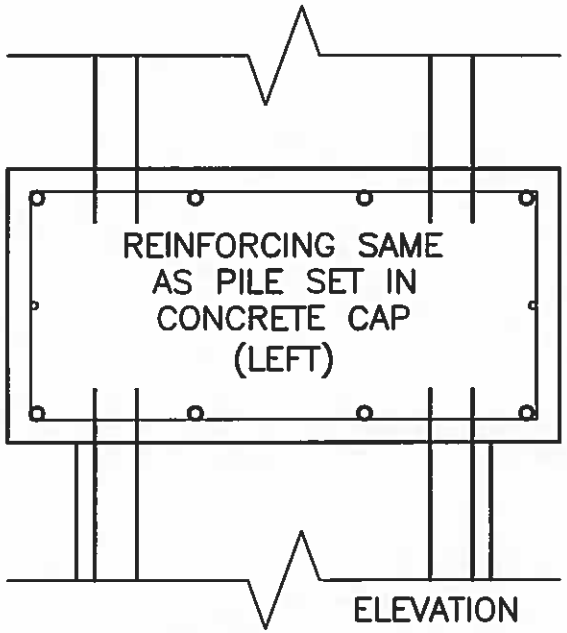

PILES EXTENDING THROUGH CONCRETE CAP

USE WITH AML 30-30-1

STEEL PILES REINFORCED CONCRETE CAP (AML 30-30-2)

KY DAML 9-2013

1. BURY ONLY 1/2 BASKET FOR WALLS SHORTER THAN 9 FT.
2. GABION WALLS MUST BE CONSTRUCTED IN A STAGGER PATTERN AS SHOWN. THIS MUST BE DONE FOR BOTH DIRECTIONS OF THE WALL.

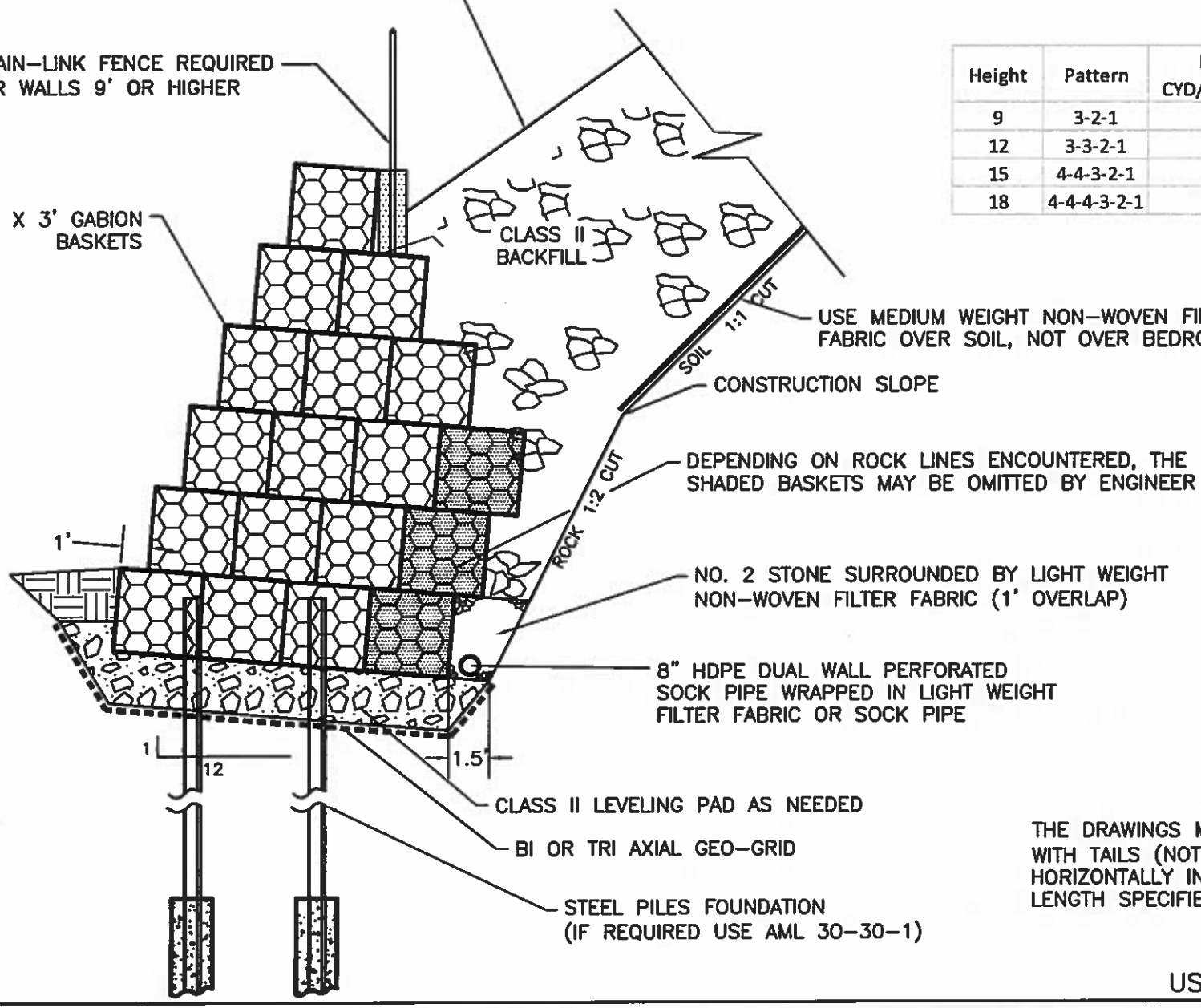

Height	Pattern	Backfill CYD/LF Average
9	3-2-1	8.3
12	3-3-2-1	10.8
15	4-4-3-2-1	18.3
18	4-4-4-3-2-1	24.3

THE DRAWINGS MAY REQUIRE GABIONS WITH TAILS (NOT SHOWN). TAILS EXTEND HORIZONTALLY INTO THE BACKFILL AT LENGTH SPECIFIED ON DRAWINGS.

USE WITH AML 70-30-1

GABION RETAINING WALL (AML 30-40-1)

KY DAML 4-2013

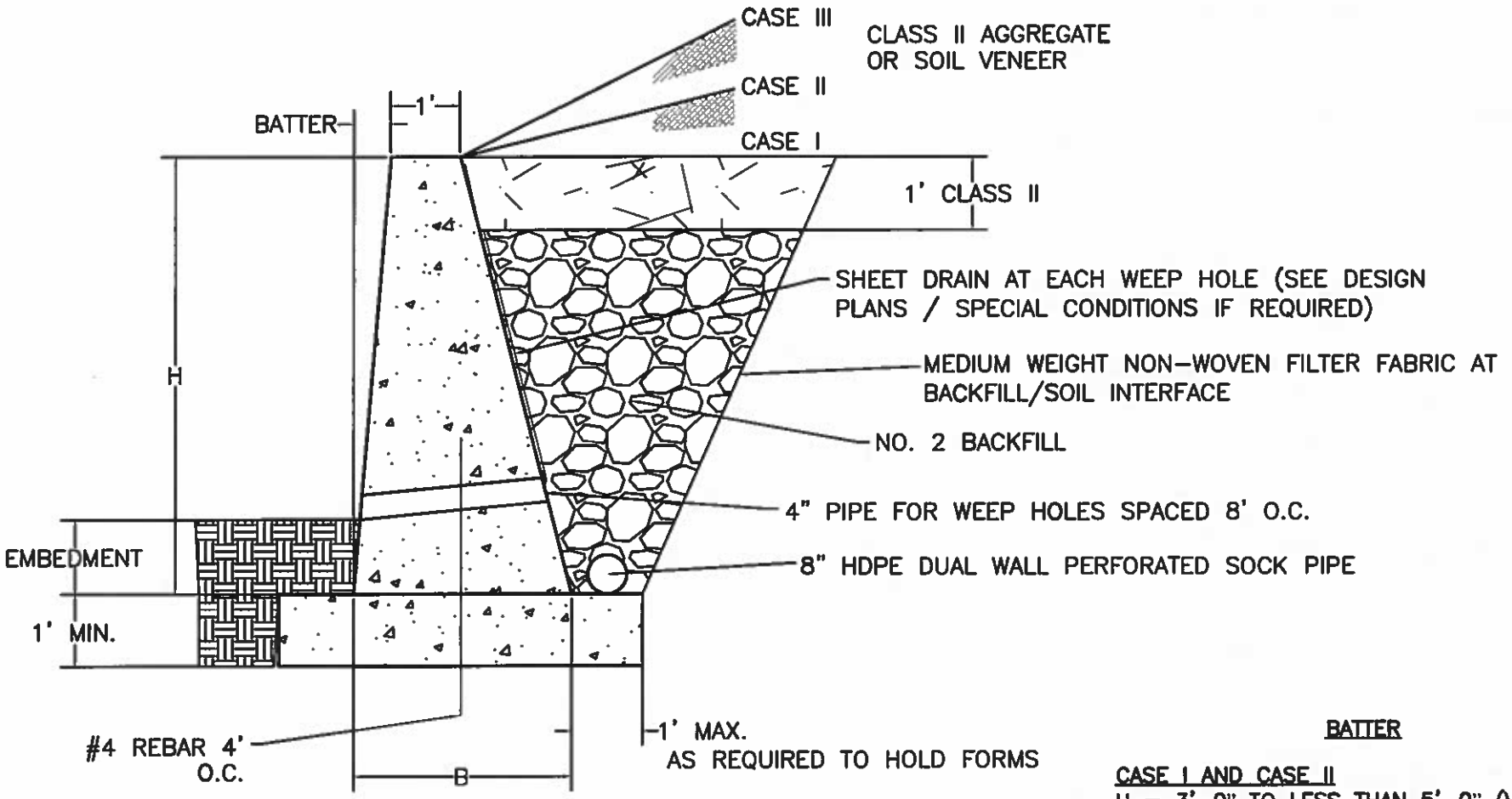

EMBEDMENT

1. MINIMUM EMBEDMENT VALUE FOR FIRM EARTH IS 2'-0".
2. CASE III REQUIRES AN EMBEDMENT OF 1/4 H FOR A WALL OVER 8'.
3. FOR FOOTER SET ON ROCK 1/2 FOOTER DEPTH WILL BE SET IN ROCK.

WALL TERMINATES INTO HILLSIDE WINGED OR AT 90° ANGLE

BATTER

CASE I AND CASE II
H = 3'-0" TO LESS THAN 5'-0" (VERTICAL)
H = 5'-0" TO LESS THAN 10'-0" (12:1)
H = 10'-0" TO LESS THAN 12'-0" (6:1)

CASE III
H = 3'-0" TO LESS THAN 5'-0" (12:1)
H = 5'-0" TO LESS THAN 12'-0" (6:1)

USE WITH AML 30-50-2

CONCRETE GRAVITY WALL (AML 30-50-1)

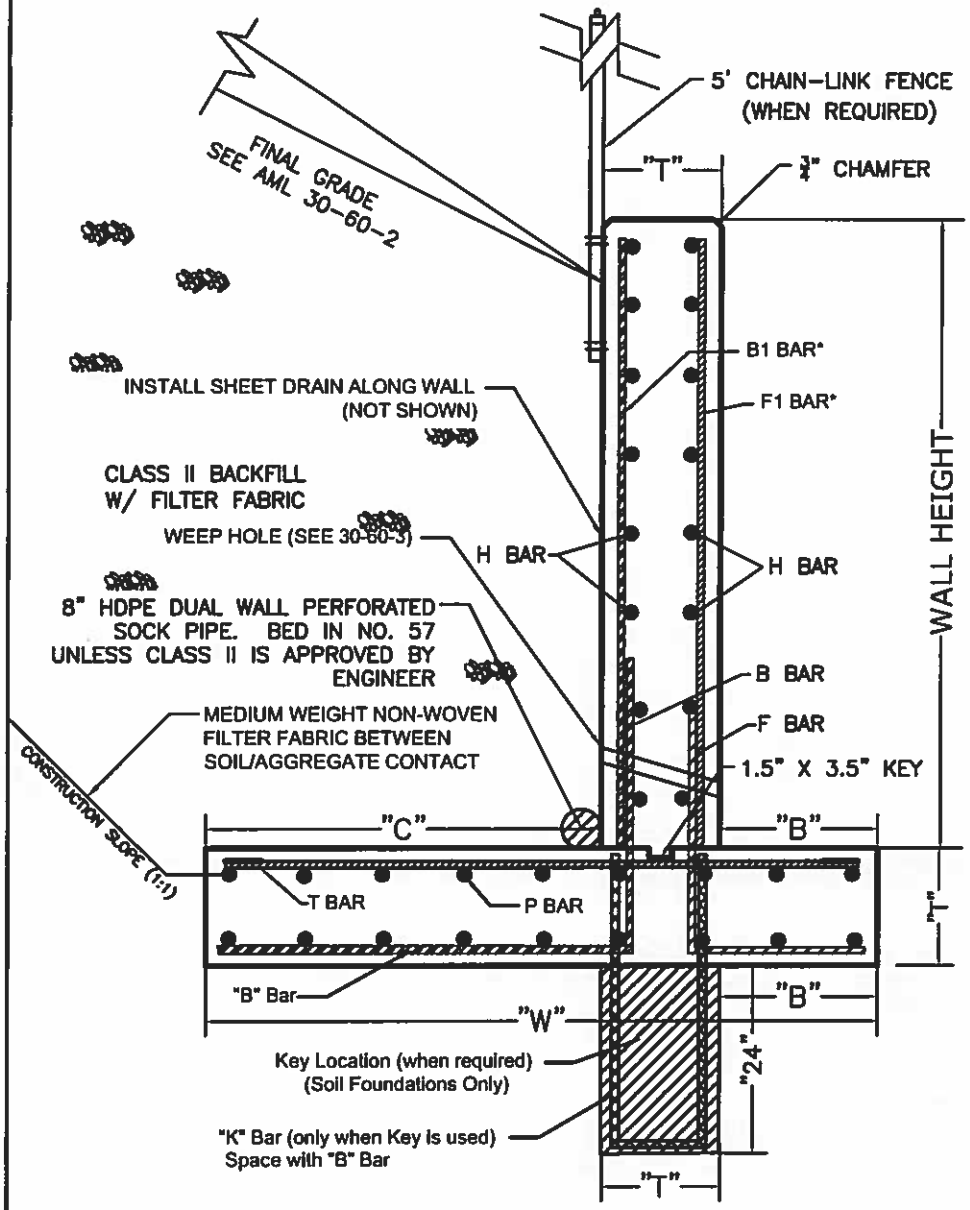

KEY AND FOOTING SHALL BE SAME CONCRETE POUR

THE BASE OF THE FOOTER MUST BE SET MIN. 24" DEPTH.

WALLS TERMINATE INTO HILLSIDE WINGED OR AT 90° ANGLE.

WALL DIMENSIONS (FEET)				
WALL HT	"B"	"C"	"T"	"W"
5'-7'	2.00	3.00	1.00	6.00
8'-10'	2.25	3.50	1.25	7.00
11'-13'	2.75	4.00	1.25	8.00
14'-16'	3.50	5.00	1.50	10.00
17'-20'	4.00	6.25	2.25	12.50

ALL REINFORCEMENT IS TO BE SPACED AT 12 INCH CENTERS

REINFORCEMENT REQUIREMENTS						
WALL HT	B BAR	F BAR	H BAR	P BAR	T BAR	K BAR
5'-7'	#5	#5	#4	#5	#5	#4
8'-10'	#6	#5	#5	#5	#6	#4
11'-13'	#7	#5	#5	#5	#7	#4
14'-16'	#8	#5	#6	#5	#8	#4
17'-20'	#9	#5	#6	#5	#9	#4

* B1 BAR IS TO BE ONE BAR SIZE SMALLER THAN "B" BAR
* F1 BAR IS TO BE ONE BAR SIZE SMALLER THAN "F" BAR

NUMBER OF H BARS TO USE IS EQUAL TO WALL HEIGHT X 2
NUMBER OF P BARS TO USE IS EQUAL TO "W" (FOOTING WIDTH) X 2

BAR DIMENSIONS (FEET)			
WALL HT	B BAR	F BAR	K BAR
5'-7'	L= 3.00', M= 2.75'	L= 2.75', N= 1.75'	L= 2.50', N= 0.50'
8'-10'	L= 3.33', M= 3.25'	L= 2.75', N= 2.0'	L= 2.50', N= 0.50'
11'-13'	L= 4.00', M= 3.75'	L= 3.50', N= 2.50'	L= 2.50', N= 0.75'
14'-16'	L= 5.00', M= 4.75'	L= 3.75', N= 3.25'	L= 2.50', N= 1.00'
17'-20'	L= 7.25', M= 6.00'	L= 4.25', N= 3.75'	L= 2.50', N= 1.50'

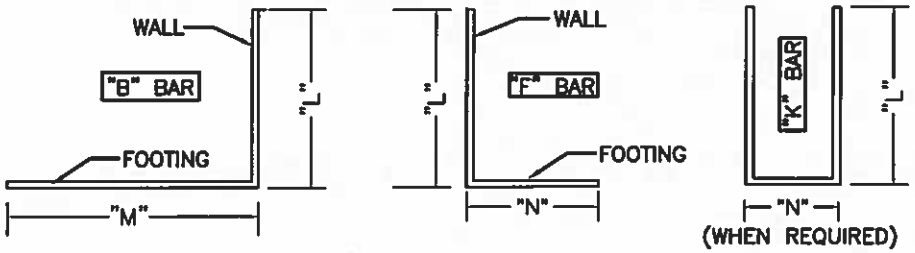

USE WITH AML 30-60-2 TO 5

REINFORCED CONCRETE WALL (HEIGHTS FROM 5' TO 20') (AML 30-60-1)

KY DAML 10-2013

CONSTRUCTION NOTES:

ALL FOUNDATION EXCAVATION AREA SHALL BE APPROVED BY THE ENGINEER, PRIOR TO THE PLACEMENT OF FORMWORK AND REBAR PLACEMENT. IN THE OPINION OF THE ENGINEER, ANY AREA NOT SUITABLE FOR FOOTING PLACEMENT (I.E. SOFT, SATURATED, ETC.) SHALL BE OVER EXCAVATED AND BACKFILLED WITH MECHANICALLY COMPACTED DENSE GRADE AGGREGATE AS DIRECTED BY THE ENGINEER.

ALL REINFORCING BARS ARE 2" FROM EDGE UNLESS OTHERWISE NOTED.

SAFETY FENCE MAY BE BOLTED TO THE WALL OR SET IN PLACE WITH CONCRETE BEHIND THE WALL. DO NOT PLACE FENCE IN THE WALL.

CONSTRUCTION JOINTS SHALL BE PLACED A MINIMUM OF 10' & A MAXIMUM OF 20'.

ALL STEEL REINFORCEMENT SHALL BE 60 KSI.

ALL CONCRETE SHALL BE 4,000 PSI WITH FIBER REINFORCEMENT.

FINAL SLOPE SHALL BE MAX 2:1 FROM THE TOP EDGE OF THE WALL, MAX. 1.5:1 IF ROCK FROM WALL IS LEVEL FOR 10' THEN SLOPED UP.

AT THE CONTRACTOR'S REQUEST, THE LENGTHS OF THE LONGITUDINAL REINFORCEMENT MAY BE CHANGED WITH PRIOR APPROVAL OF THE ENGINEER. LONGER OR SHORTER LONGITUDINAL BARS MAY BE USED TO ACCOMMODATE CONSTRUCTION OR FOR ECONOMY. ALL WORK AND/OR MATERIALS REQUIRED FOR CHANGES IN THE LENGTHS OF LONGITUDINAL REINFORCEMENT SHALL BE AT NO COST TO AML. SPLICES MUST BE IN ACCORDANCE WITH THE "STEEL" SECTION OF THE TECHNICAL SPECIFICATIONS.

CONCRETE VOLUMES		
WALL HEIGHT	VOLUME (PER FOOT OF WALL LENGTH)	Key Volume (PER FOOT OF WALL LENGTH)
5'-7'	V= 0.23 + (.04 x H)	0.074 Cu. Yds.
8'-10'	V= 0.32 + (.05 x H)	0.093 Cu. Yds.
11'-13'	V= 0.37 + (.05 x H)	0.093 Cu. Yds.
14'-16'	V= 0.56 + (.06 x H)	0.111 Cu. Yds.
17'-20'	V= 1.04 + (.09 x H)	0.167 Cu. Yds.

V= Cu. Yds. PER FOOT OF WALL LENGTH
H= ACTUAL WALL HEIGHT USED FOR DESIGN

Example: 12' Wall Height, 100' Long, with Key

V= 0.37+(.05 x 12) + 0.093 = 1.063
Total V= 1.063 x 100' = 106.3 Cu. Yds.

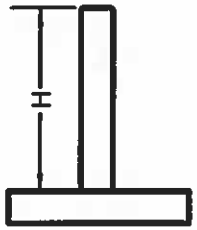

REINFORCEMENT QUANTITIES			
WALL HEIGHT	FOOTING*	WALL**	ADD FOR "K" BAR
5'-7'	29.50	2.68	3.68
8'-10'	35.00	3.80	3.68
11'-13'	54.63	4.26	3.85
14'-16'	80.22	5.72	4.02
17'-20'	118.38	6.34	4.36

* PER FOOT OF WALL LENGTH
** PER FOOT OF WALL HEIGHT AND PER FOOT OF WALL LENGTH

Example: 12' Wall Height, 100' Long, with Key

[(4.26 x 12) + 54.63 + 3.85] x 100 = 10,960 LBS. REINFORCEMENT

WALL HEIGHT — "K" BAR BECAUSE USING KEY

USE WITH AML 30-60-1

REINFORCED CONCRETE WALL- CONSTRUCTION NOTES & QUANTITIES (AML 30-60-2)

KY DAML 10-2013

NOTE: ALL CONCRETE 4,000 PSI

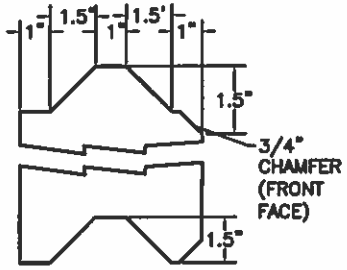

PRECAST CONCRETE LAGGING KEY

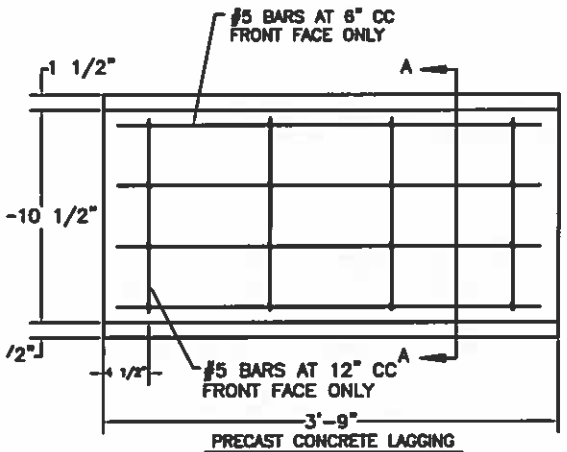

PRECAST CONCRETE LAGGING

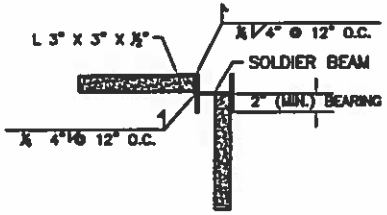

INSIDE CORNER LAGGING

NTS

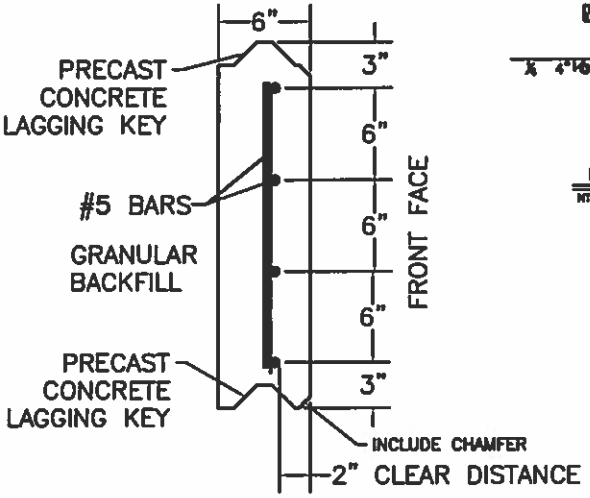

SECTION A–A

NOTE:

SEE PROFILE SHEET AND CROSS SECTIONS OF THE DESIGN DRAWINGS FOR SPECIFIC WALL HEIGHTS.

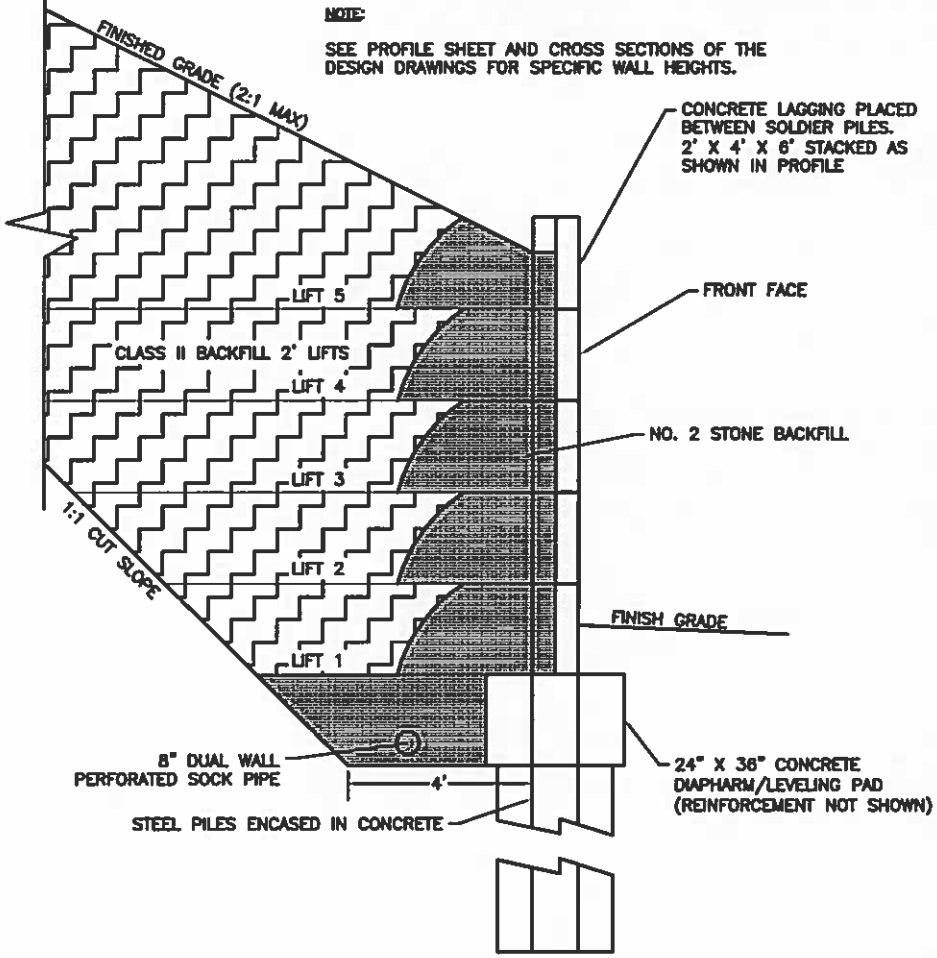

SECTION – PILE AND LAGGING WALL

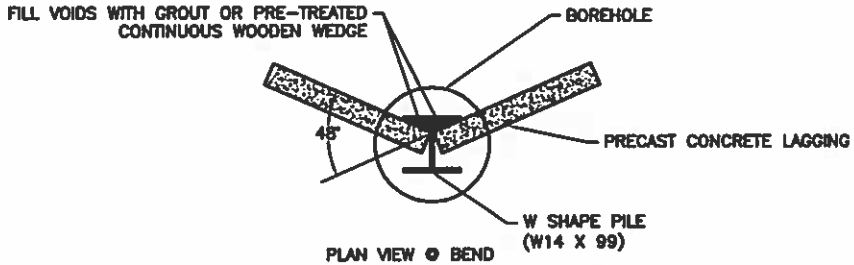

FLANGE PRESSURE DISTRIBUTION DETAIL

NTS

USE WITH AML 30–70–2

PILE AND LAGGING WALL- SHEET 1 (AML 30-70-1)

KY DAML 4–2013

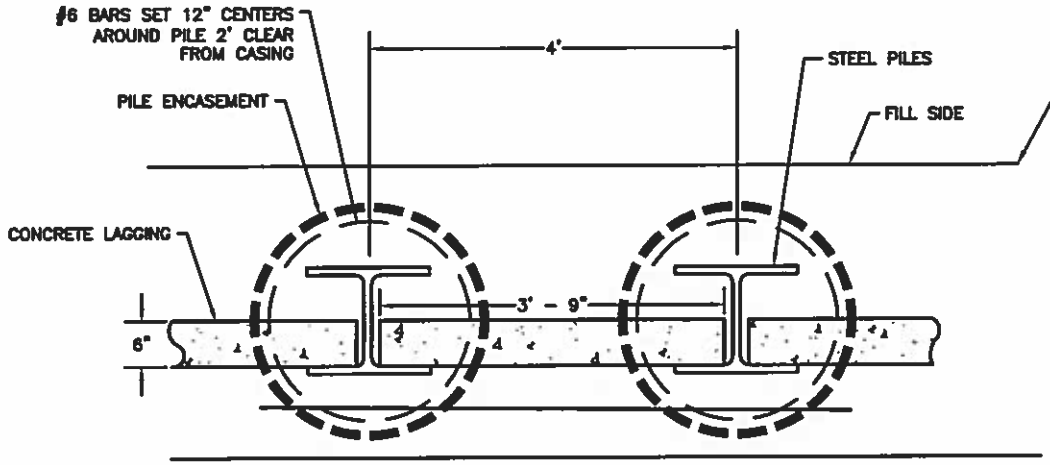

PLAN VIEW
NTS

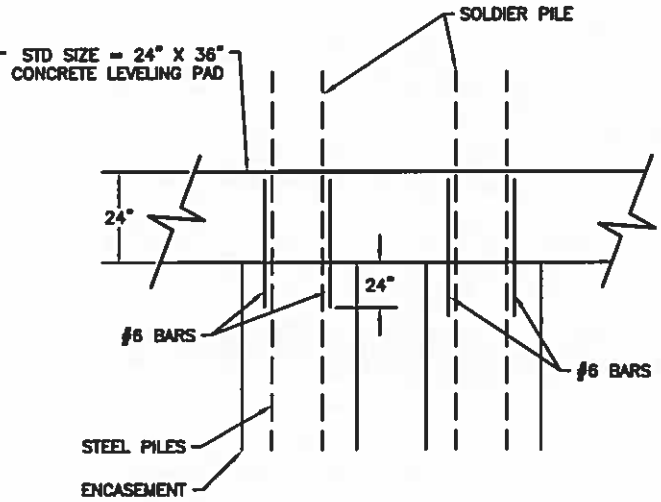

ELEVATION
NTS

NOTE:

THE CONTRACTOR SHALL NOTIFY THE ENGINEER PRIOR TO FORMING AND/OR POURING ANY PANELS SUCH THAT THE ENGINEER MAY HAVE A REPRESENTATIVE ON SITE PRIOR TO AND DURING THE POURING PROCESS.

ALL STEEL REINFORCEMENT SHALL BE ACCURATELY PLACED IN THE FORMS VERTICALLY AND HORIZONTALLY OF THE THE POSITIONS SHOWN. THE REINFORCEMENT CAGE (REAR) SHALL BE HELD FIRMLY IN PLACE BY THE USE OF CHAIRS AND WIRE TIES DURING THE VIBRATION, AGITATION, AND CURING CYCLES OF THE CONCRETE TO PREVENT MOVEMENT. WIRE TIES SHALL BE USED IN THE FABRICATION OF THE REINFORCEMENT CAGE (REBAR). ALL STEEL REINFORCEMENT SHALL BE 60 KIS. WELDING SHALL NOT BE PERMITTED.

FOR SPLICES SEE AML 30-70-3 AND "STEEL" SECTION OF TECHNICAL SPECIFICATIONS.

SEE AML 30-30-2 FOR CONCRETE CAP REINFORCEMENT DETAILS. STANDARD SIZE IS 2' H X 3' W.

USE WITH AML 30-70-1

PILE AND LAGGING WALL- SHEET 2 (AML 30-70-2)

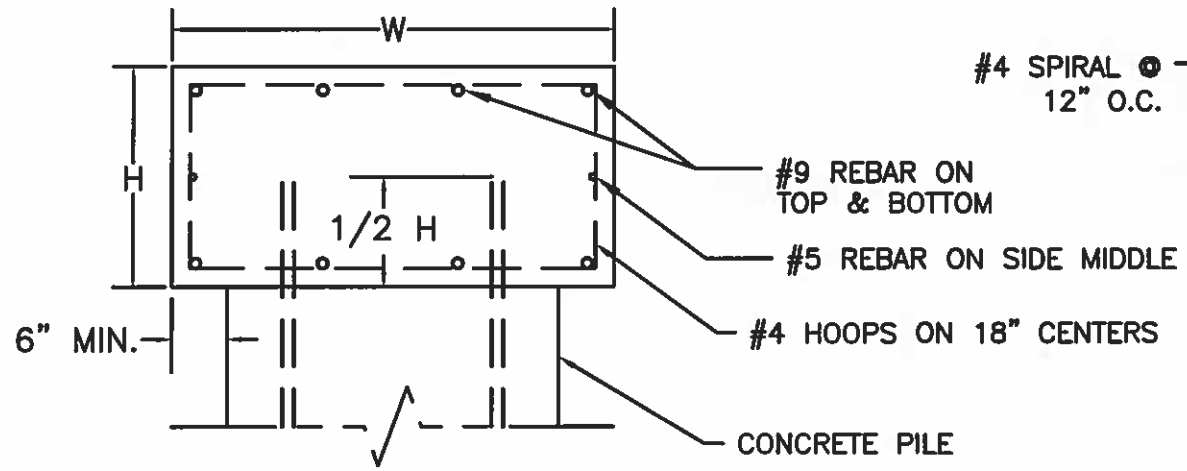

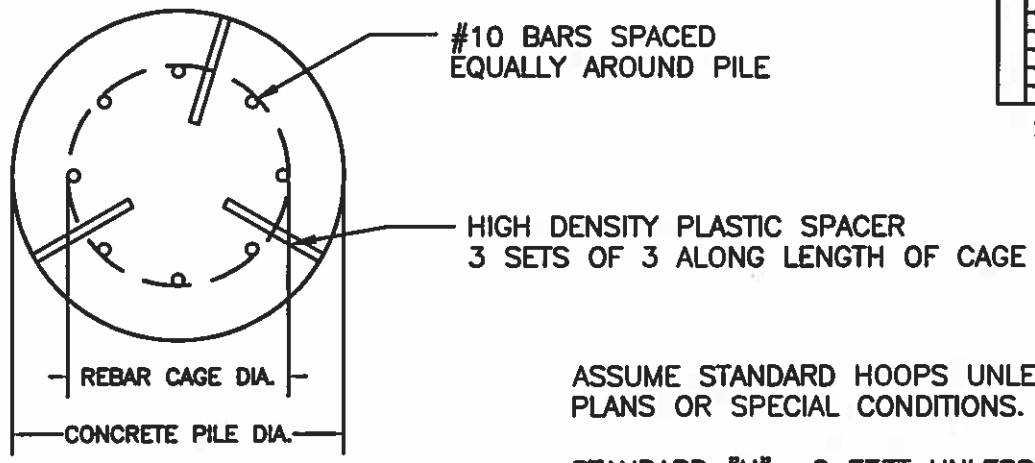

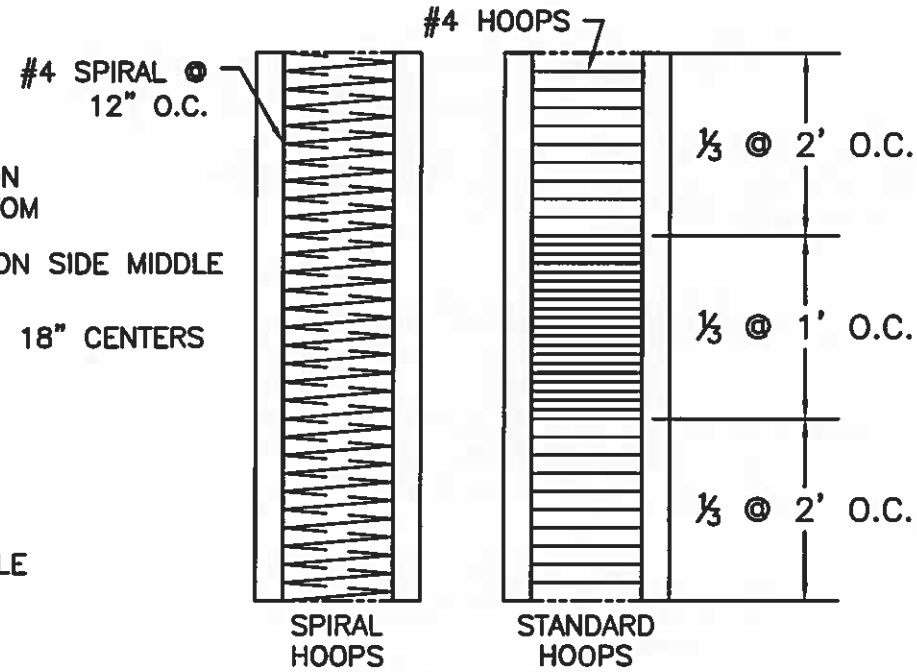

ASSUME STANDARD HOOPS UNLESS SPECIFIED OTHERWISE ON DESIGN PLANS OR SPECIAL CONDITIONS.

STANDARD "H"= 2 FEET UNLESS NOTED OTHERWISE ON DRAWINGS OR SPECIAL CONDITIONS. "W" = PILE DIA. + 6" OVERHANG ON EACH SIDE.

	REINFORCED CONCRETE CAP		CONCRETE PILE				SPACER SIZE
	STEEL (lbs)	CONCRETE (cyd)	STEEL (lbs)		CONCRETE (cyd)	NO. OF #10 BARS	
			w/ Spiral Hoops	w/ Standard Hoops			
24" PILE	33.19	0.22	2.8	34.32	0.116	7	6"
30" PILE	33.59	0.26	5.2	44.32	0.182	9	6"
36" PILE	34.09	0.30	6.4	52.93	0.262	11	9"
	PER LINEAR FOOT						

REINFORCED CONCRETE PILES & CAP (AML 30-80-1)

KY DAML 2-2013

BLOCKS MUST HAVE INTERLOCKING PATTERN AND WEIGHT AT LEAST 10 LBS PER BLOCK

THE CONCRETE HEADER EXTENDS TO AT LEAST 2' BELOW THE TOP OF THE BLOCK.

ENGINEER MAY ELECT TO ADD CONCRETE FOOTER TO CROSSING DESIGN. USE SAME DIMENSION AS HEADER ANCHOR.

ENGINEER MUST PRE-APPROVE BLOCK MATERIAL PRIOR TO DELIVER TO SITE. ALL BLOCKS MUST INTERLOCK ON ALL SIDES.

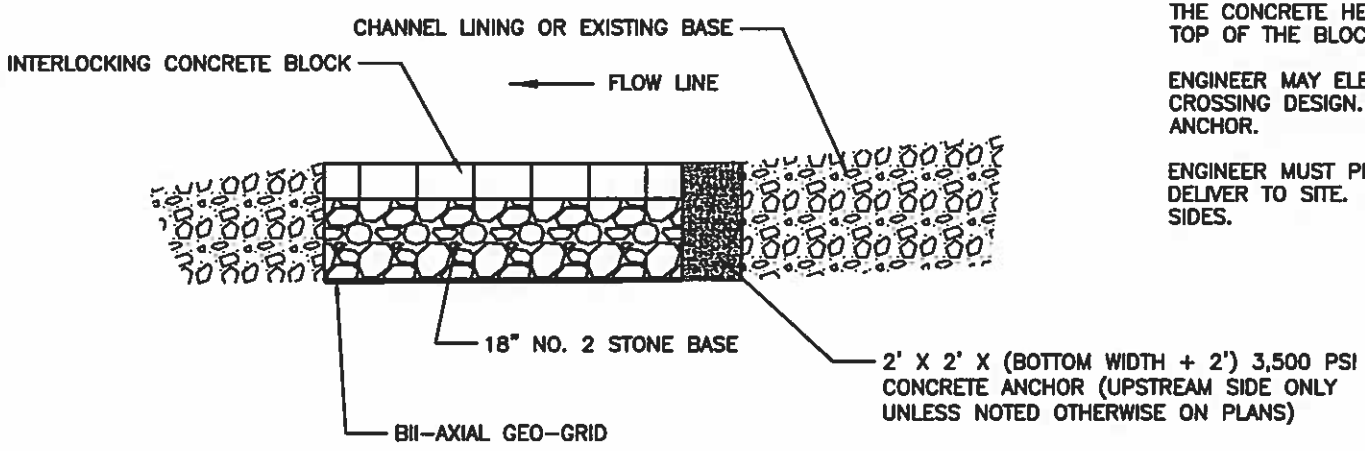

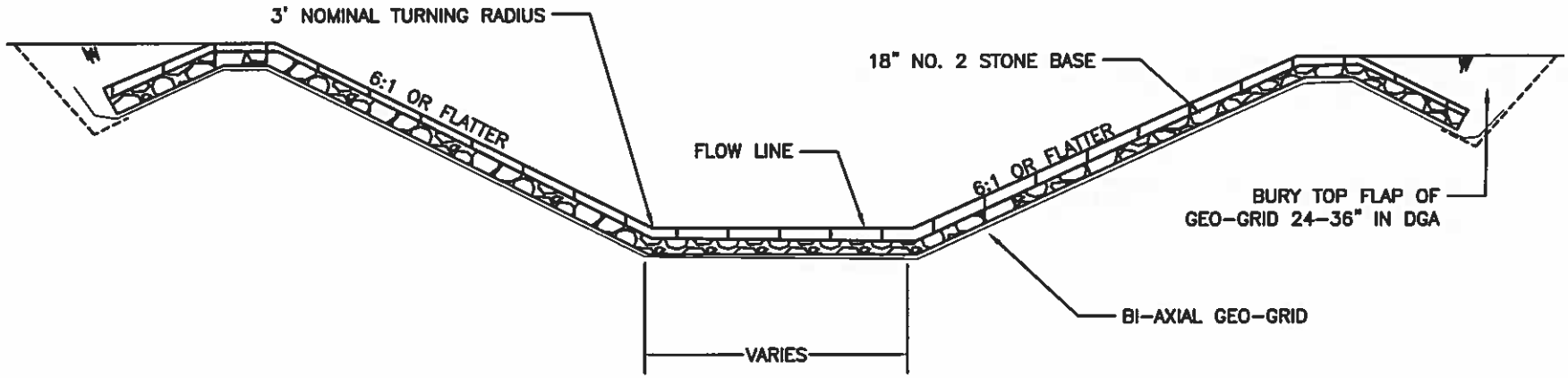

CONCRETE BLOCK- INTERLOCKING MAT (AML 50-10-6)

KY DAML 7-2013

Guidelines for Low Water Crossing

1. There shall be a maximum fill height of four and one-half (4½) feet measured from the channel bottom to the top of the proposed crossing.
2. The pipes used for the proposed crossing shall not be less than 24" in diameter or more than 36" in diameter.
3. There shall not be more than one (1) foot spacing between the pipes measured between the outside edges of the pipes.
4. As many pipes as possible shall be placed within the stream banks.
5. Fill material used to cover the pipes shall be composed entirely of clean rock or concrete. No soil shall be allowed in the fill.
6. All pipes shall be laid flush with the bottom of the stream channel.
7. The maximum cover over the top of the pipe shall not be greater than eighteen (18) inches.

Standard Drawing

Not to Scale

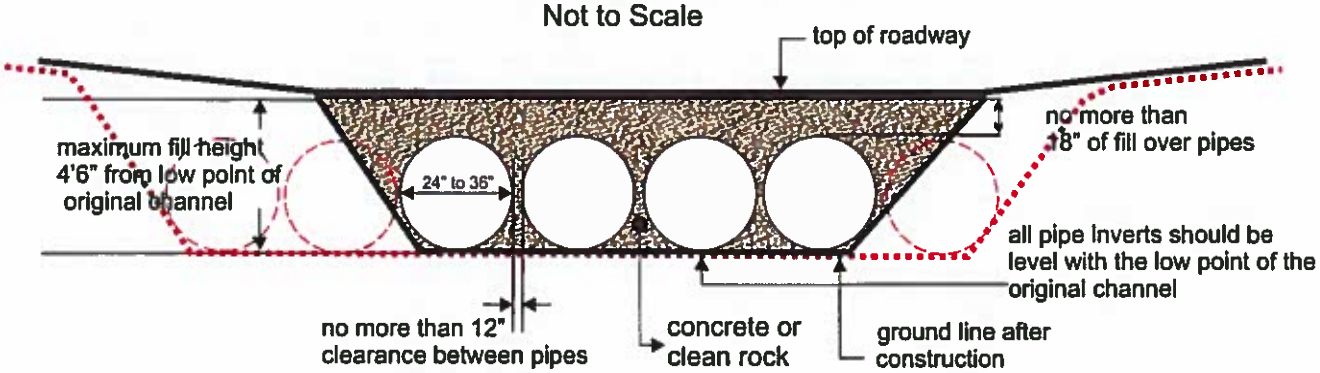

Notes:

1. This is a conceptual drawing. The number and size of pipes and other details will vary depending on specific site conditions.
2. The pipes and backfill must be contained within the stream channel as shown above. During the construction of the approaches and access roadway across the floodplain, unstable and unconsolidated materials unsuitable for roadways may be excavated and replaced with riprap, crushed stone, or other stable road construction materials. This may only be done, however, with the following provisions: (1) the disposal of excess, unconsolidated materials thus excavated must be outside of the floodplain and (2) the finished surface of the completed road may be no more than three inches (3") above the pre-construction surface of the floodplain at any point beyond the top of banks.

KY DAML 7-2013

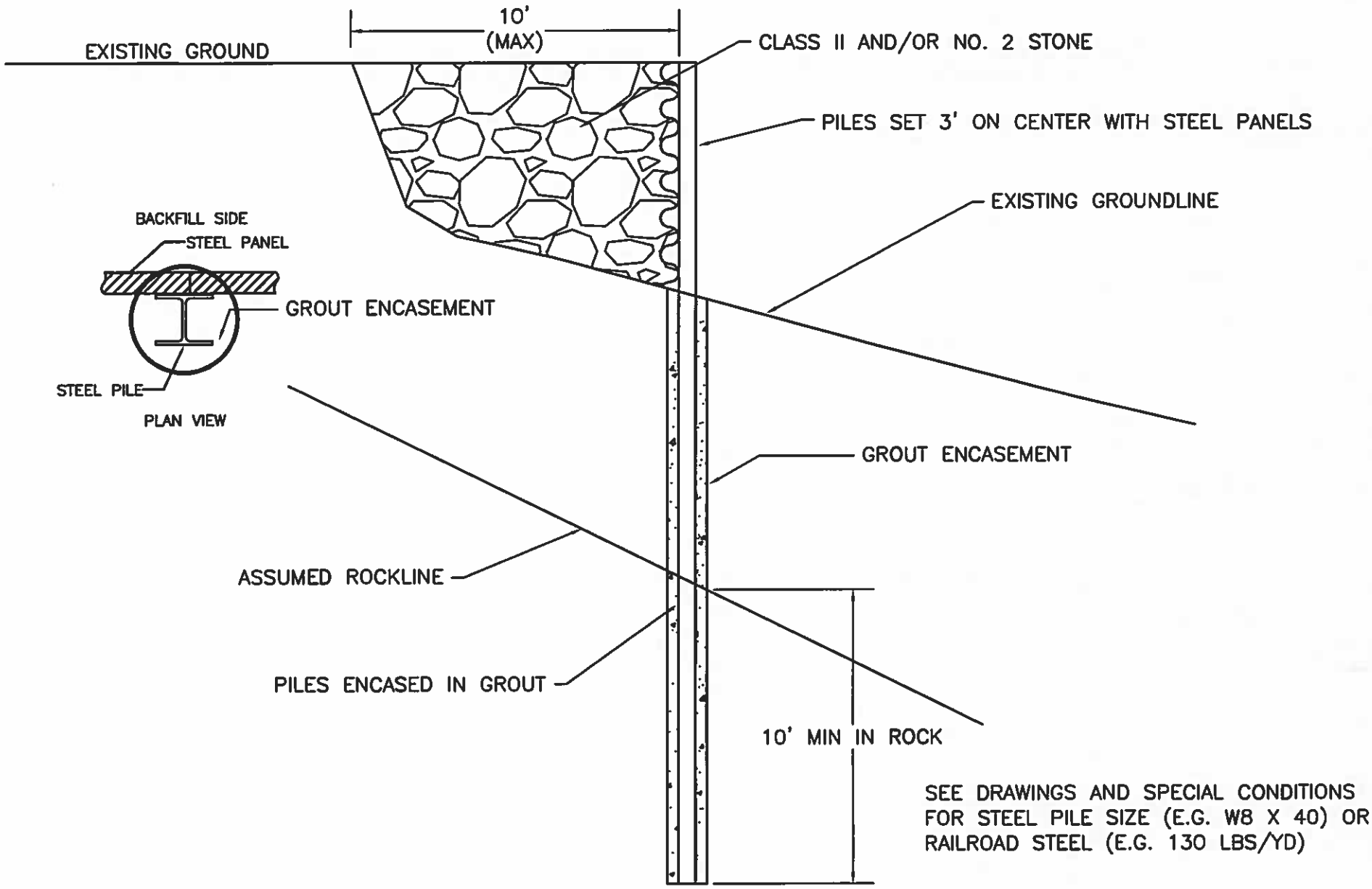

GUARDRAIL PANEL WALL- STEEL PILES (AML 50-20-3)

KY DAML 4-2013

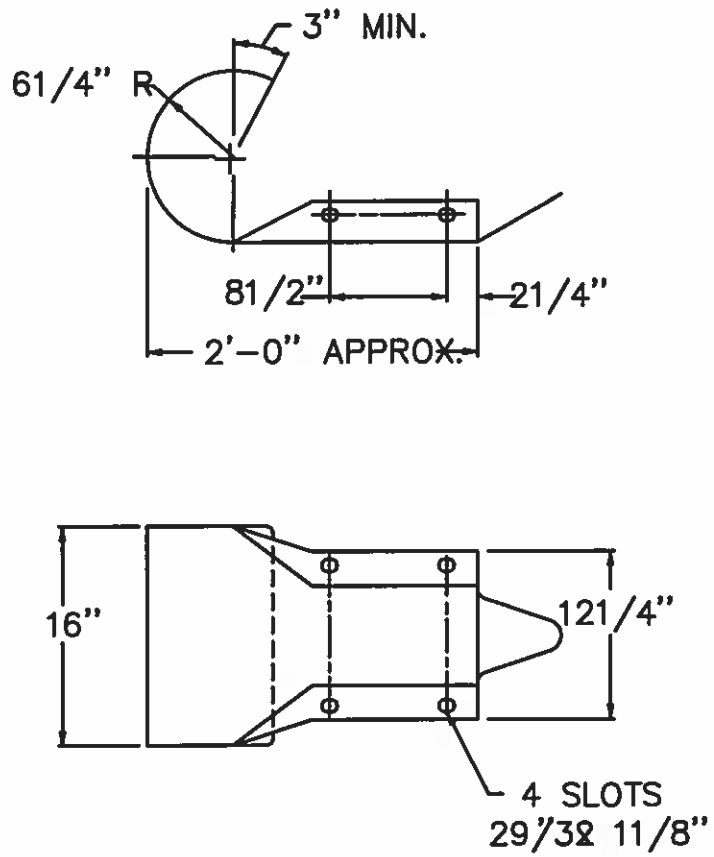

GUARDRAIL TERMINAL SECTION (AML 50-20-9)

KYDAML 10/2013