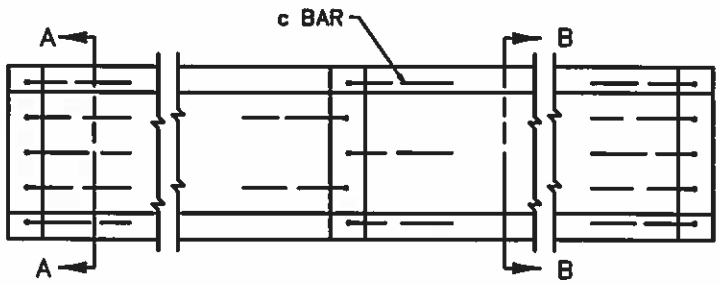

PLAN VIEW

NOTES:

1. ESTIMATE 0.032 CYD CLASS "A" CONCRETE PER LF OF DITCH AND 0.060 CYD CLASS "A" CONCRETE PER ANCHOR BASED ON MINIMUM DIMENSIONS SHOWN. ALL CONCRETE HAS FIBER REINFORCEMENT.
2. IF THE CONTRACTOR ELECTS TO USE A CONSTRUCTION JOINT IN THE POURING OF THE PAVED DITCH, IT SHALL BE CONSTRUCTED AS SHOWN.
3. ANY LENGTH OF LONGITUDINAL REINFORCEMENT STEEL WILL BE PERMITTED PROVIDED A 1'-0" LAP IS USED IN THE SPLICE. ADEQUATE TIES AT THE SPLICE SHALL BE REQUIRED.

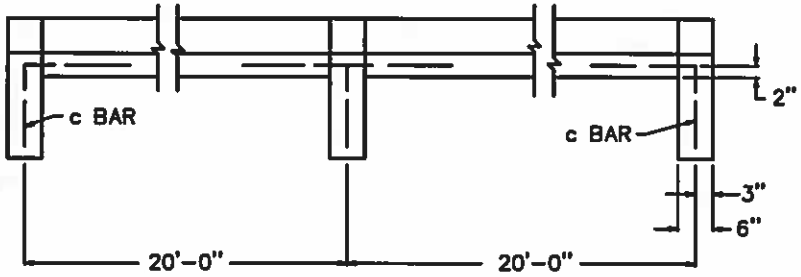

ELEVATION VIEW

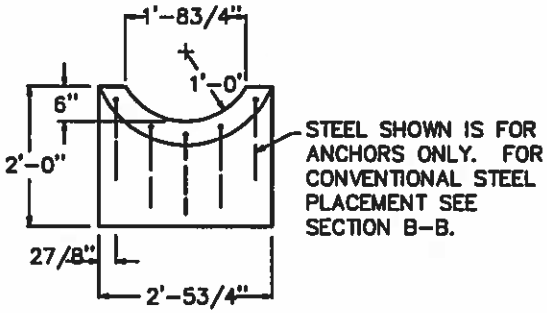

SECTION A-A

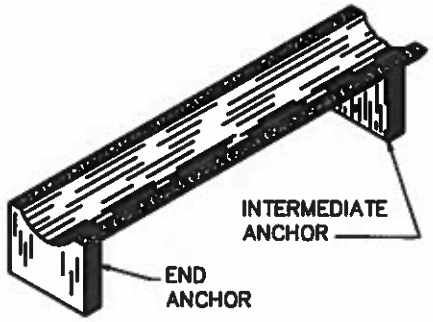

ISOMETRIC VIEW

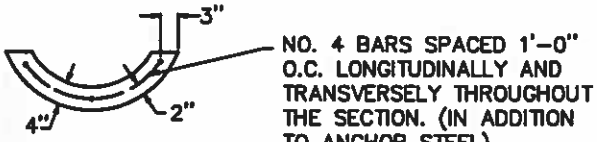

SECTION B-B

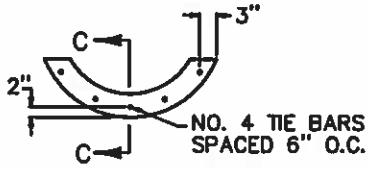

TIE BAR SECTIONAL VIEW

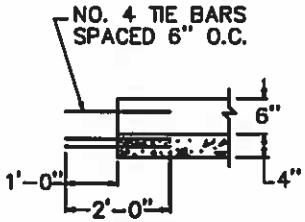

SECTION C-C

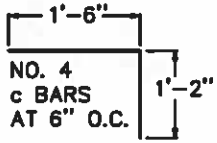

c BAR DETAIL

APPROXIMATE STEEL QUANTITIES FOR MINIMUM SECTION SHOWN			
END ANCHORS (EACH)	8.90 LBS.	CONSTRUCTION JOINTS (EACH)	6.68 LBS.
INTERMEDIATE ANCHORS (EACH)	8.90 LBS.	BARS PER SQ. YD. OF DITCH	12.47 LBS.

CONCRETE DITCH- SWALE (AML 21-50-1)

KYDAML 10-2013

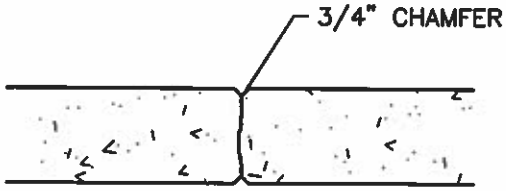

CONSTRUCTION JOINT

SEE AML 30-60-3 FOR ADDITIONAL DETAILS

CONSTRUCTION JOINTS SHALL BE PLACED A MINIMUM OF 10' & A MAXIMUM OF 20'. SEE "STEEL" SECTION OF AML TECHNICAL SPECIFICATION FOR BAR SPLICES & EMBEDMENT INFORMATION.

ALL STEEL REINFORCEMENT SHALL BE 60 KSI. ALL CONCRETE IS 4,000 PSI WITH FIBER REINFORCEMENT. SECURITY ANCHORS ARE INCIDENTAL. DON'T WELD GRATES CLOSED.

VEHICLE GRATE IS EQUIVALENT OF HOE OF KY TYPE A W/ EMBEDDED FRAME RAIL.

NON-VEHICULAR GRATE IS 1" X 3/16" BEARING BAR SIZE PLAIN BLACK PAINTED, WELDED STEEL BAR GRATING.

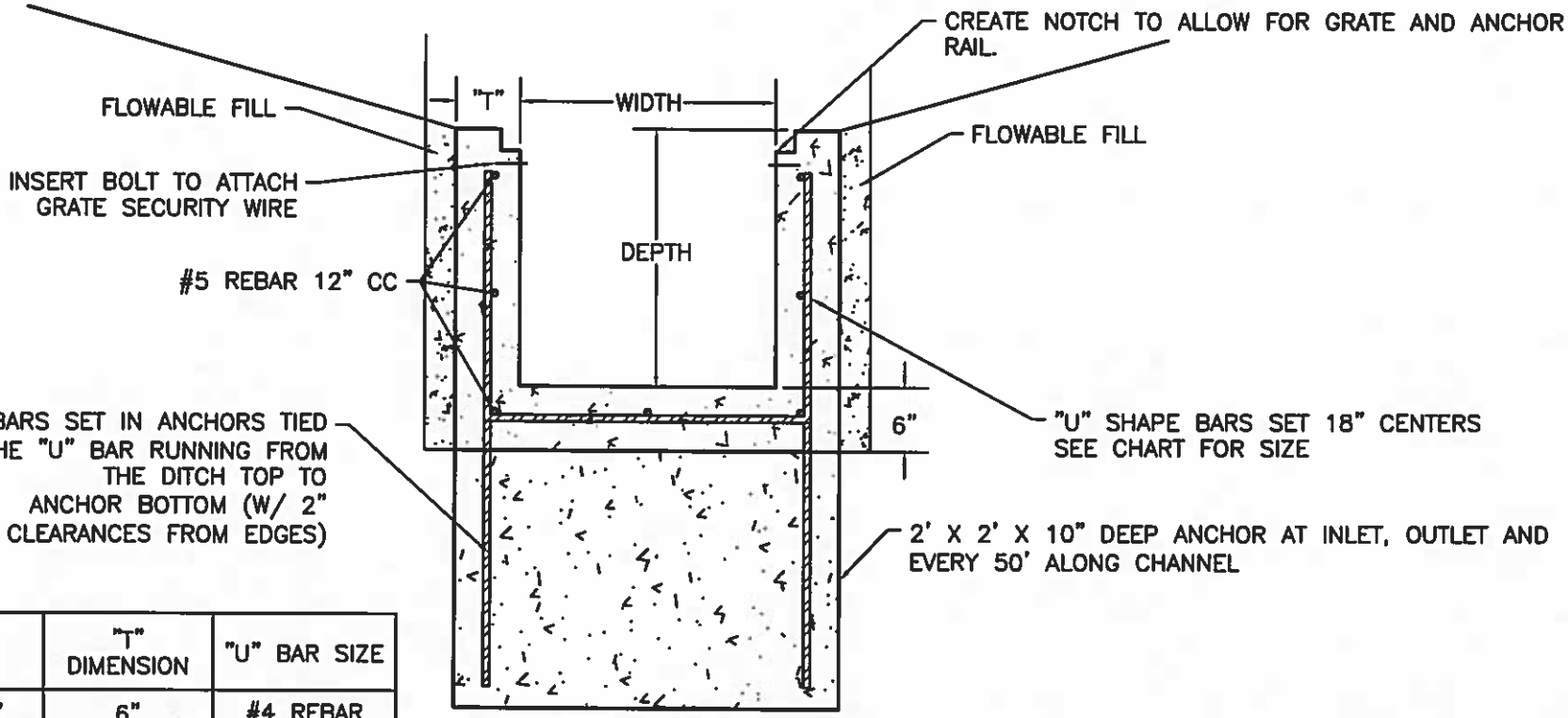

DEPTH	"T" DIMENSION	"U" BAR SIZE
0' – 3'	6"	#4 REBAR
3.1' – 6'	10"	#5 REBAR

ALL REBAR SHALL HAVE 2" MIN CLEARANCE. INSTALL SIDEWALLS COMPLETELY BELOW GROUNDLINE. UNITS MAY BE PRE-CAST WITH ENGINEER'S PRIOR APPROVAL.

FOR GRATES USE WITH AML 24-50-1

CONCRETE DITCH- RECTANGULAR (AML 21-50-3)

1. REMOVE LOOSE MATERIAL FROM HIGHWALL PRIOR TO WALL CONSTRUCTION.
2. CONSTRUCT BASE ON A CONCRETE FOOTER UNLESS DIRECTED OTHERWISE BY ENGINEER.
3. SEE DESIGN DRAWINGS IF CHAIN-LINK FENCE (NOT SHOWN) IS REQUIRED.
4. IF DESIGN HEIGHT IS TO EXCEED 8' THEN WALL MUST BE SPECIALLY DESIGNED.

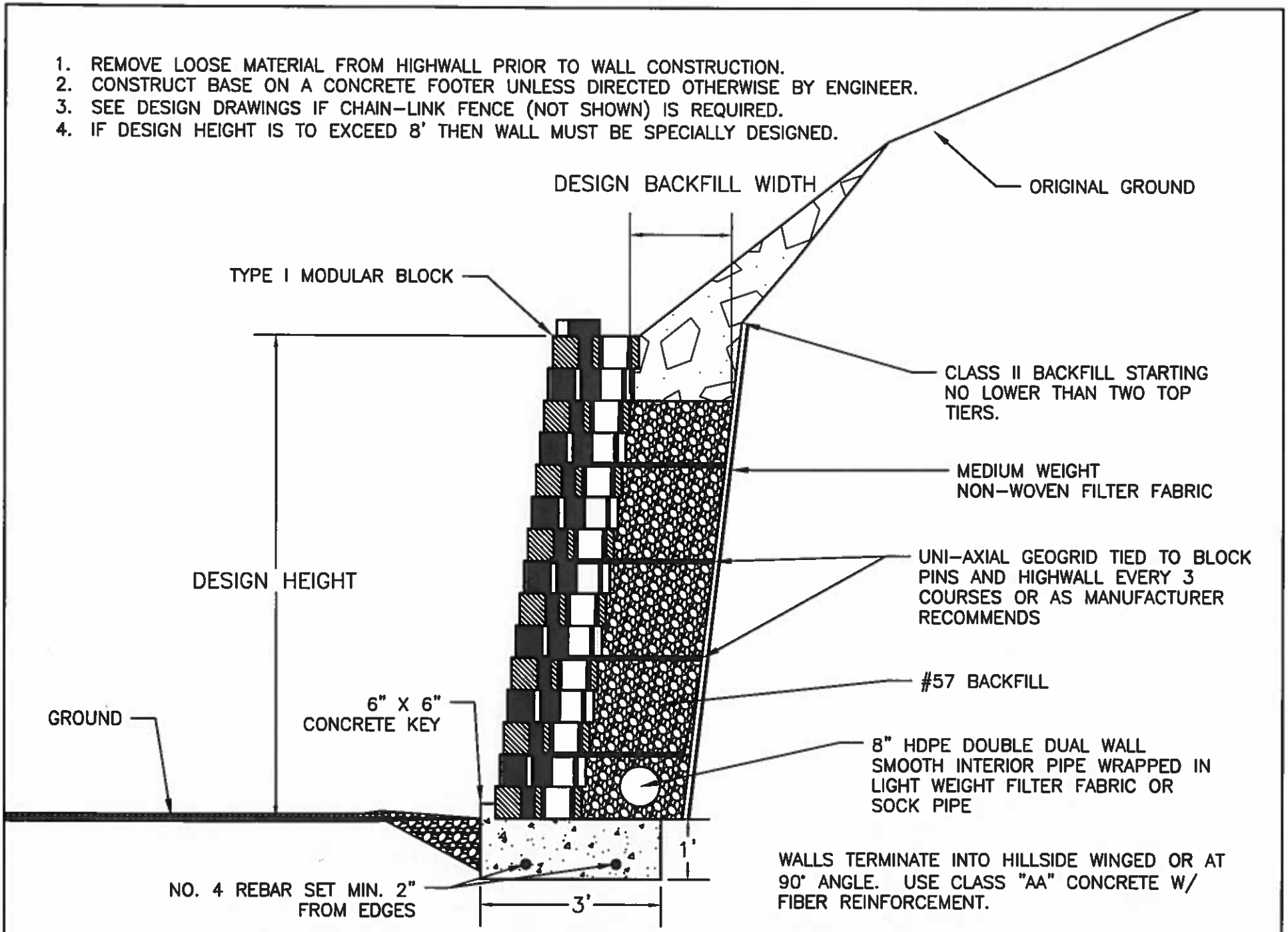

NON-REINFORCED BLOCK WALL- TYPE I (AML 30-20-1)

KY DAML 10-2013

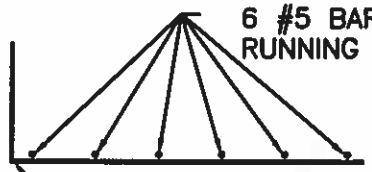

6 #5 BARS SPACED EVENLY RUNNING LENGTH OF FOOTER

#4 REBAR SET 18" CENTERS ALONG FOOTER

FOOTER REINFORCEMENT DETAIL
NTS

CLASS II BACKFILL ABOVE WALL (IF REQUIRED) 1.5:1 MAX SLOPE

CHAIN-LINK FENCE (NOT SHOWN)

WALLS TERMINATE INTO HILLSIDE WINGED OR AT 90° ANGLE.

Design	FF	No. 2	Class II	Row							
Height	SY/LF	Ton/LF	Ton/LF	1	2	3	4	5	6	7	8
4.5	0.8	1.2	0.8	60"	41"	28"					
6	1.0	1.7	0.9	60"	41"	41"	28"				
7.5	1.2	2.2	0.9	60"	41"	41"	41"	28"			
9	1.3	2.7	1.0	60"	41"	41"	41"	41"	28"		
10.5	1.4	3.3	1.1	60"	60"	41"	41"	41"	41"	28"	
12	1.7	3.2	1.1	60"	60"	41"	41"	41"	41"	41"	28"

28" TOP BLOCK

NO. 2 STONE BACKFILL SET IN 2' LIFTS

1.5:1 MAX.

41" BLOCK

1.25" SETBACK (TYP.)

MOVE BLOCKS FORWARD DURING INSTALLATION TO ENGAGE SHEAR KNOBS

UP TO 9' TALL = 41" BLOCK
OVER 9' TALL = 60" BLOCK

MEDIUM WEIGHT NON-WOVEN FILTER FABRIC IF SOIL CONTACT

60" BLOCK

OPTIONAL DRAIN PLACEMENT

6" X 6" CONCRETE KEY

REINFORCED CONCRETE LEVELING PAD SET BELOW LOCAL FROST LINE, CLASS "AA" CONCRETE W/ FIBER REINFORCEMENT (7' X 2' X LENGTH WALL)

8" HDPE DUAL WALL WRAPPED IN LIGHT WEIGHT FILTER FABRIC OR SOCK PIPE

GRAVEL SUB BASE (IF REQUIRED BY ENGINEER, BIAXIAL GEO-GRID NOT SHOWN)

#4 REBAR SET 18" CENTERS ALONG FOOTER

6 #5 BARS SPACED EVENLY RUNNING LENGTH OF FOOTER

USE WITH AML 30-20-3

NON-REINFORCED BLOCK WALL- TYPE II (AML 30-20-2)

KY DAML 10-2013

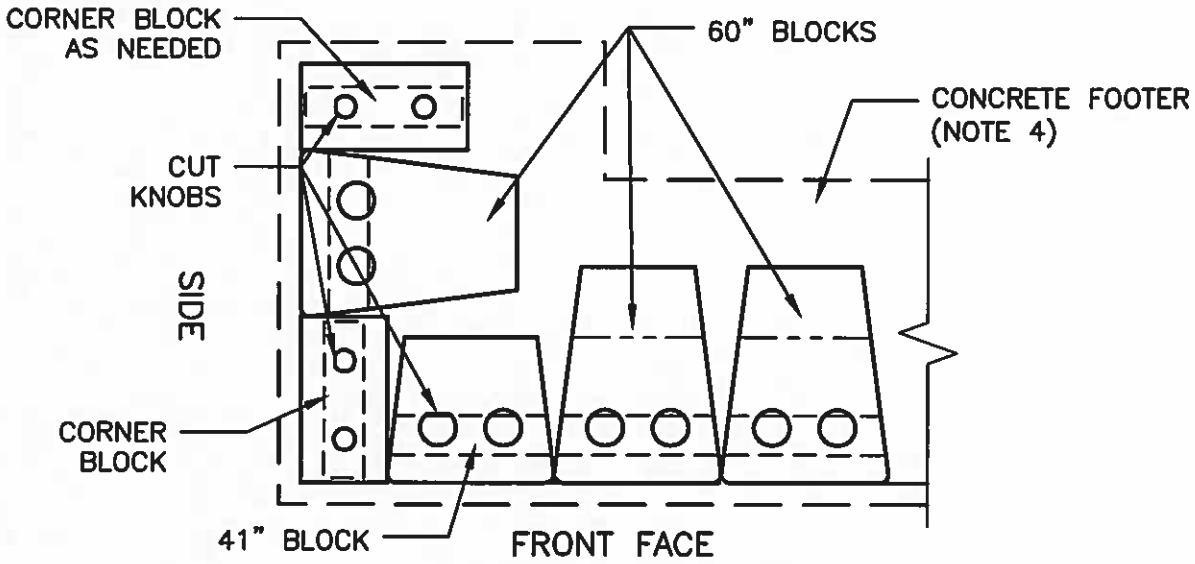

ODD NUMBER ROWS
(INCLUDES BASE)

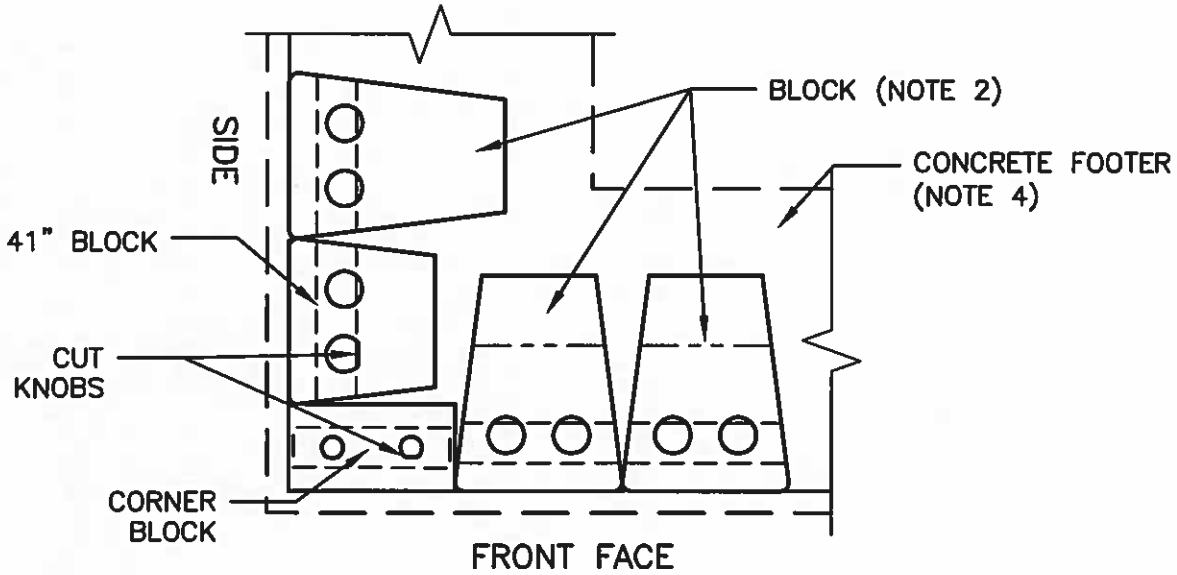

EVEN NUMBER ROWS

1. CORNER BLOCKS ARE 46" X 24" W/ 6" KNOBS. BASE COURSE HAS STRAIGHT BOTTOM.
2. SEE 30-20-2 FOR BLOCK SIZE PER ROW HEIGHT.
3. CUT EDGE OF 10" KNOBS ON 41" BLOCKS AND 6" KNOB ON CORNER BLOCK W/ CHOP SAW TO PROVIDE CLEARANCE FOR BLOCKS IN THE NEXT ROW.
4. LAP LONGITUDINAL BARS IN CONCRETE FOOTER AT CORNERS.

NON-REINFORCED BLOCK WALL- TYPE II 90° OUTSIDE CORNER (AML 30-20-3)

USE WITH AML 30-20-2

KTDMS, 10-2013

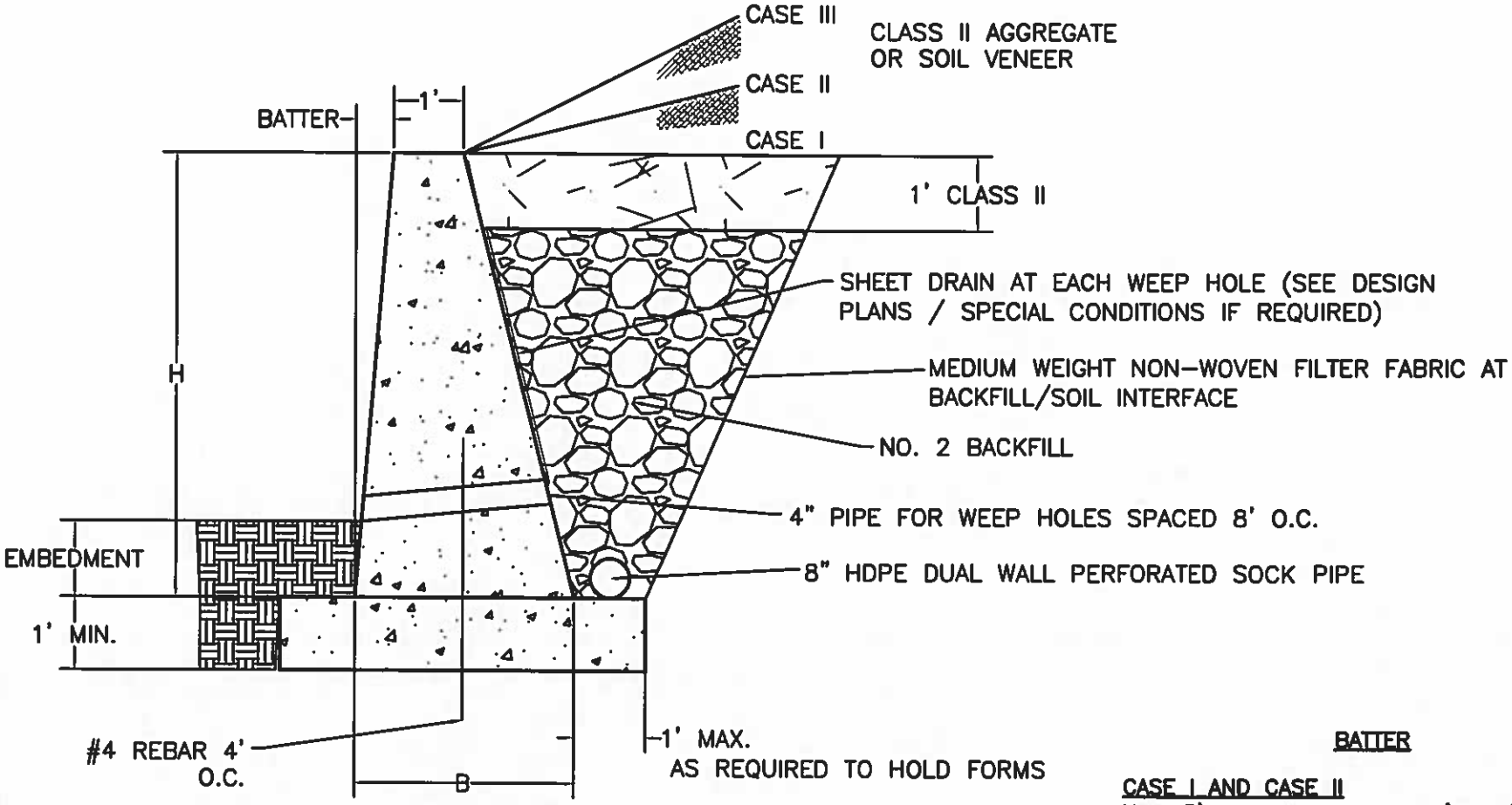

EMBEDMENT

1. MINIMUM EMBEDMENT VALUE FOR FIRM EARTH IS 2'-0".
2. CASE III REQUIRES AN EMBEDMENT OF 1/4 H FOR A WALL OVER 8'.
3. FOR FOOTER SET ON ROCK 1/2 FOOTER DEPTH WILL BE SET IN ROCK.

WALL TERMINATES INTO HILLSIDE WINGED OR AT 90° ANGLE

BATTER

CASE I AND CASE II
H = 3'-0" TO LESS THAN 5'-0" (VERTICAL)
H = 5'-0" TO LESS THAN 10'-0" (12:1)
H = 10'-0" TO LESS THAN 12'-0" (6:1)

CASE III
H = 3'-0" TO LESS THAN 5'-0" (12:1)
H = 5'-0" TO LESS THAN 12'-0" (6:1)

USE WITH AML 30-50-2

CONCRETE GRAVITY WALL (AML 30-50-1)

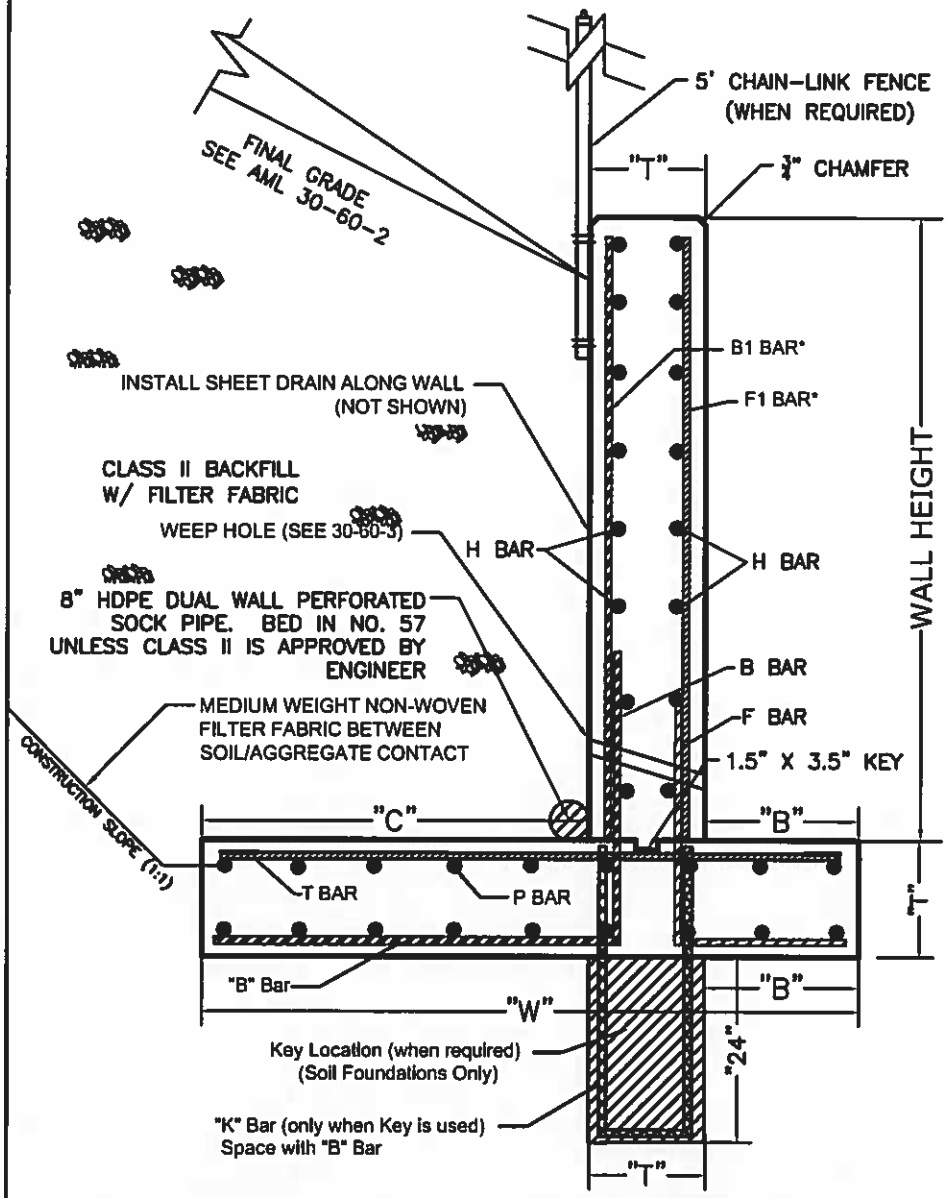

KEY AND FOOTING SHALL BE SAME CONCRETE POUR

THE BASE OF THE FOOTER MUST BE SET MIN. 24" DEPTH.

WALLS TERMINATE INTO HILLSIDE WINGED OR AT 90° ANGLE.

WALL DIMENSIONS (FEET)				
WALL HT	"B"	"C"	"T"	"W"
5'-7'	2.00	3.00	1.00	6.00
8'-10'	2.25	3.50	1.25	7.00
11'-13'	2.75	4.00	1.25	8.00
14'-16'	3.50	5.00	1.50	10.00
17'-20'	4.00	6.25	2.25	12.50

ALL REINFORCEMENT IS TO BE SPACED AT 12 INCH CENTERS

REINFORCEMENT REQUIREMENTS						
WALL HT	B BAR	F BAR	H BAR	P BAR	T BAR	K BAR
5'-7'	#5	#5	#4	#5	#5	#4
8'-10'	#6	#5	#5	#5	#6	#4
11'-13'	#7	#5	#5	#5	#7	#4
14'-16'	#8	#5	#6	#5	#8	#4
17'-20'	#9	#5	#6	#5	#9	#4

* B1 BAR IS TO BE ONE BAR SIZE SMALLER THAN "B" BAR
* F1 BAR IS TO BE ONE BAR SIZE SMALLER THAN "F" BAR

NUMBER OF H BARS TO USE IS EQUAL TO WALL HEIGHT X 2
NUMBER OF P BARS TO USE IS EQUAL TO "W" (FOOTING WIDTH) X 2

BAR DIMENSIONS (FEET)			
WALL HT	B BAR	F BAR	K BAR
5'-7'	L= 3.00', M= 2.75'	L= 2.75', N= 1.75'	L= 2.50', N= 0.50'
8'-10'	L= 3.33', M= 3.25'	L= 2.75', N= 2.0'	L= 2.50', N= 0.50'
11'-13'	L= 4.00', M= 3.75'	L= 3.50', N= 2.50'	L= 2.50', N= 0.75'
14'-16'	L= 5.00', M= 4.75'	L= 3.75', N= 3.25'	L= 2.50', N= 1.00'
17'-20'	L= 7.25', M= 6.00'	L= 4.25', N= 3.75'	L= 2.50', N= 1.50'

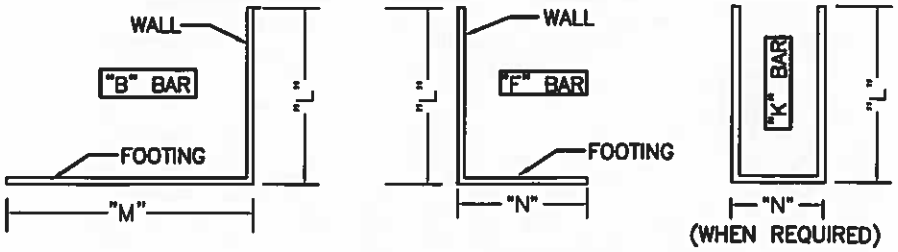

USE WITH AML 30-60-2 TO 5

REINFORCED CONCRETE WALL (HEIGHTS FROM 5' TO 20') (AML 30-60-1)

KY DAML 10-2013

CONSTRUCTION NOTES:

ALL FOUNDATION EXCAVATION AREA SHALL BE APPROVED BY THE ENGINEER, PRIOR TO THE PLACEMENT OF FORMWORK AND REBAR PLACEMENT. IN THE OPINION OF THE ENGINEER, ANY AREA NOT SUITABLE FOR FOOTING PLACEMENT (I.E. SOFT, SATURATED, ETC.) SHALL BE OVER EXCAVATED AND BACKFILLED WITH MECHANICALLY COMPACTED DENSE GRADE AGGREGATE AS DIRECTED BY THE ENGINEER.

ALL REINFORCING BARS ARE 2" FROM EDGE UNLESS OTHERWISE NOTED.

SAFETY FENCE MAY BE BOLTED TO THE WALL OR SET IN PLACE WITH CONCRETE BEHIND THE WALL. DO NOT PLACE FENCE IN THE WALL.

CONSTRUCTION JOINTS SHALL BE PLACED A MINIMUM OF 10' & A MAXIMUM OF 20'.

ALL STEEL REINFORCEMENT SHALL BE 60 KSI.

ALL CONCRETE SHALL BE 4,000 PSI WITH FIBER REINFORCEMENT.

FINAL SLOPE SHALL BE MAX 2:1 FROM THE TOP EDGE OF THE WALL, MAX. 1.5:1 IF ROCK FROM WALL IS LEVEL FOR 10' THEN SLOPED UP.

AT THE CONTRACTOR'S REQUEST, THE LENGTHS OF THE LONGITUDINAL REINFORCEMENT MAY BE CHANGED WITH PRIOR APPROVAL OF THE ENGINEER. LONGER OR SHORTER LONGITUDINAL BARS MAY BE USED TO ACCOMMODATE CONSTRUCTION OR FOR ECONOMY. ALL WORK AND/OR MATERIALS REQUIRED FOR CHANGES IN THE LENGTHS OF LONGITUDINAL REINFORCEMENT SHALL BE AT NO COST TO AML. SPLICES MUST BE IN ACCORDANCE WITH THE "STEEL" SECTION OF THE TECHNICAL SPECIFICATIONS.

CONCRETE VOLUMES

WALL HEIGHT	VOLUME (PER FOOT OF WALL LENGTH)	Key Volume (PER FOOT OF WALL LENGTH)
5'-7'	V= 0.23 + (.04 x H)	0.074 Cu. Yds.
8'-10'	V= 0.32 + (.05 x H)	0.093 Cu. Yds.
11'-13'	V= 0.37 + (.05 x H)	0.093 Cu. Yds.
14'-16'	V= 0.56 + (.06 x H)	0.111 Cu. Yds.
17'-20'	V= 1.04 + (.09 x H)	0.167 Cu. Yds.

V= Cu. Yds. PER FOOT OF WALL LENGTH
H= ACTUAL WALL HEIGHT USED FOR DESIGN

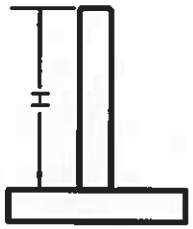

Example: 12' Wall Height, 100' Long, with Key

V= 0.37+(.05 x 12) + 0.093 = 1.063
Total V= 1.063 x 100' = 106.3 Cu. Yds.

REINFORCEMENT QUANTITIES

WALL HEIGHT	FOOTING*	WALL**	ADD FOR "K" BAR
5'-7'	29.50	2.68	3.68
8'-10'	35.00	3.80	3.68
11'-13'	54.63	4.26	3.85
14'-16'	80.22	5.72	4.02
17'-20'	118.38	6.34	4.36

* PER FOOT OF WALL LENGTH
** PER FOOT OF WALL HEIGHT AND PER FOOT OF WALL LENGTH

Example: 12' Wall Height, 100' Long, with Key

[(4.26 x 12) + 54.63 + 3.85] x 100 = 10,960 LBS. REINFORCEMENT

WALL HEIGHT — "K" BAR BECAUSE USING KEY

USE WITH AML 30–60–1

REINFORCED CONCRETE WALL- CONSTRUCTION NOTES & QUANTITIES (AML 30-60-2)

KY DAML 10–2013

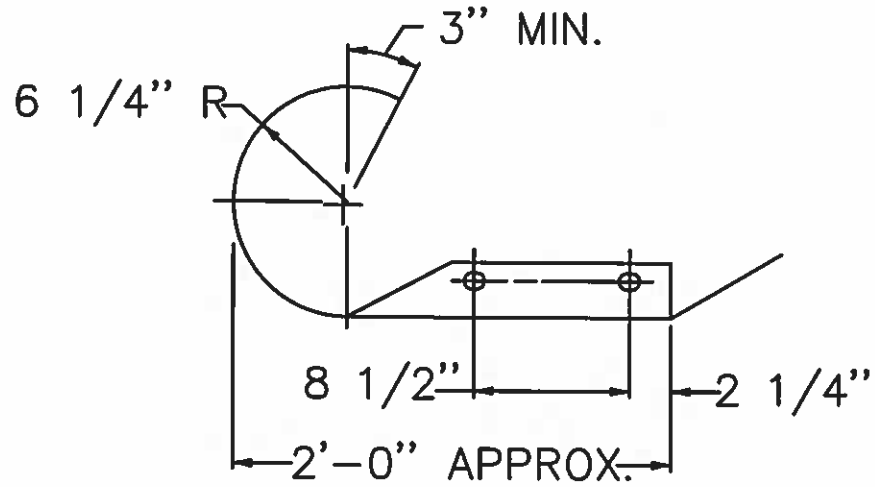

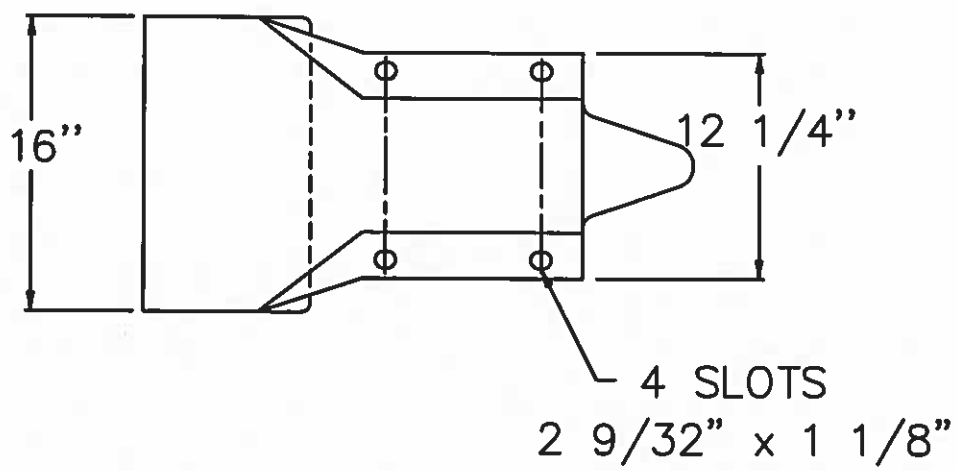

GUARDRAIL TERMINAL SECTION (AML 50-20-9)

KYDAML 10-2013