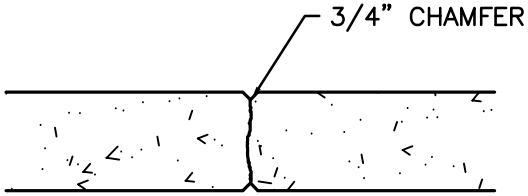

CONSTRUCTION JOINT

SEE AML 30-60-3 FOR ADDITIONAL DETAILS

CONSTRUCTION JOINTS SHALL BE PLACED A MINIMUM OF 10' & A MAXIMUM OF 20'. INSERT WEEP HOLES AT CONSTRUCTION JOINTS.

ALL STEEL REINFORCEMENT SHALL BE 60 KSI. ALL CONCRETE IS 4,000 PSI WITH FIBER REINFORCEMENT. SEE "STEEL" SECTION OF AML TECHNICAL SPECIFICATION FOR BAR SPLICES & EMBEDMENT INFORMATION. ALL REBAR SHALL HAVE 2" MIN CLEARANCE.

INSTALL SIDEWALLS COMPLETELY BELOW GROUNDLINE.

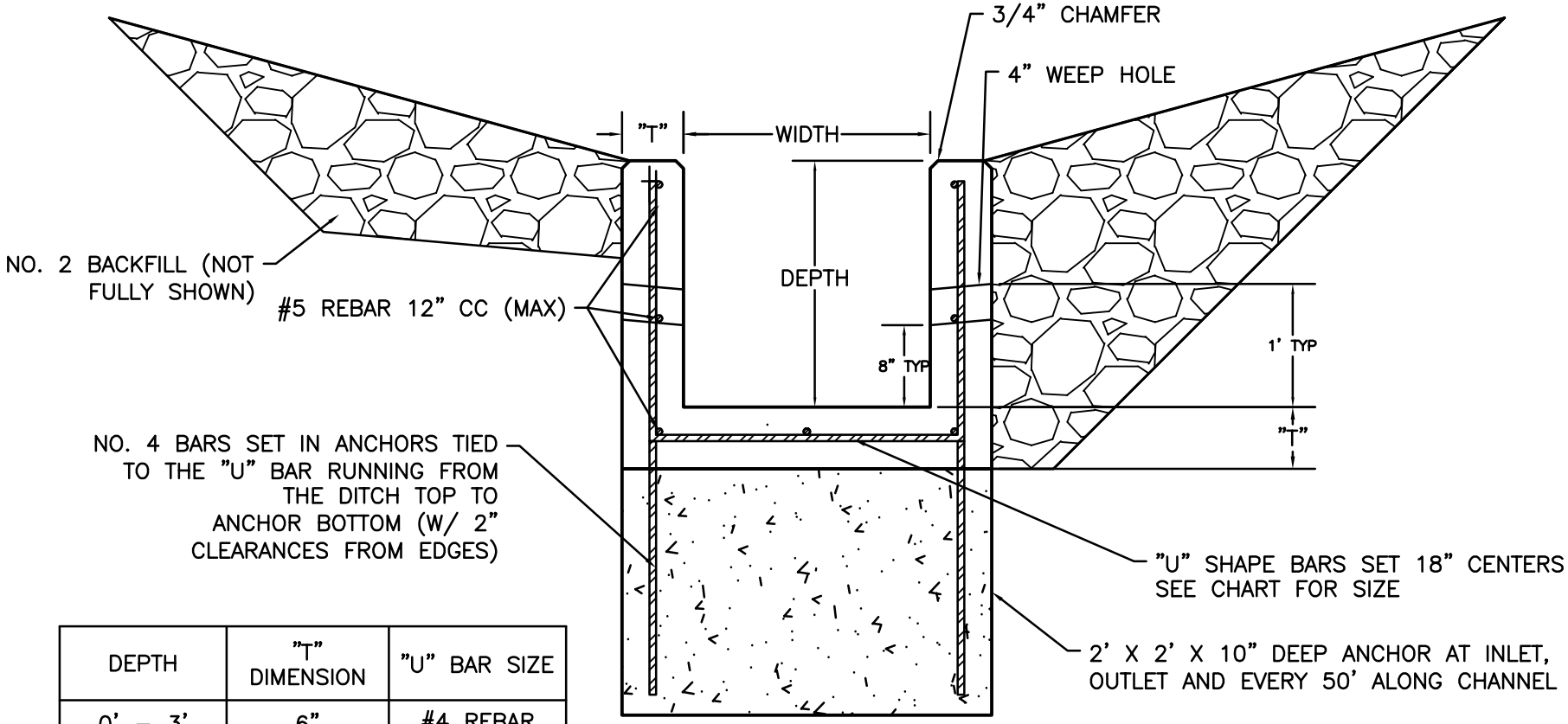

DEPTH	"T" DIMENSION	"U" BAR SIZE
0' – 3'	6"	#4 REBAR
3.1' – 6'	10"	#5 REBAR

CONCRETE DITCH- RECTANGULAR NO GRATE (AML 21-50-4)

KY DAML 12-2016